LRQA CERTIFIED ISO 9001

ADCA ADCATrol

TWO-WAY GLOBE CONTROL VALVES
V25/2
(EN)

DESCRIPTION

The ADCATrol V25/2 is a series of single seated, two-way globe valves designed for process engineering and industrial applications, where events such as erosion, cavitation or flashing may occur.
These valves can be assembled with pneumatic, hydraulic or electric actuators, for modulating and shut-off control tasks.

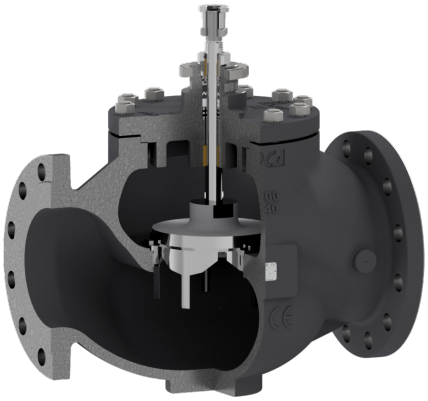

MAIN FEATURES

Robust construction.
Modular design to meet process requirements.
Stainless steel trim.

OPTIONS AND ACCESSORIES:

Bonnet extension for high and low temperatures.
Various stem sealing options including bellows sealing.
Soft, stellited and high-performance metal valve sealing.
V-port guided and perforated plugs.
Low noise, anti-cavitation single and multi-stage trims.
Reduced bore trims including microflow.
Pressure balancing trims.
Silencers.

USE:

Saturated and superheated steam.
Hot and superheated water.
Air, gases and others.

AVAILABLE MODELS:

V25/2G – SG iron.
V25/2S – carbon steel.
V25/2i – stainless steel (only available from DN 15 to DN 100).

VALVE SIZES:

DN 15 to DN 200.

CONNECTIONS:

V25/2G – Flanged EN 1092-2 PN 16.
V25/2S and V25/2i – Flanged EN 1092-1 PN 16 or PN 40.
Standard PN 16 DN 65 flanges are supplied with 4 holes. 8 holes, according to EN 1092-1/-2, on request.

CE MARKING – GROUP 2 (PED – EUROPEAN DIRECTIVE)		
PN 16	**PN 40**	**CATEGORY**
DN 15 to 50	DN 15 to 32	SEP
DN 65 to 200	DN 40 to 100	1 (CE marked)
–	DN 125 to 200	2 (CE marked)

We reserve the right to change the design and material of this product without notice.

LRQA CERTIFIED ISO 9001

BODY LIMITING CONDITIONS

V25/2G **		V25/2S *				V25/2i *			
FLANGED PN 16		FLANGED PN 16		FLANGED PN 40		FLANGED PN 16		FLANGED PN 40	
ALLOW. PRESSURE	RELATED TEMP.	ALLOW. PRESSURE	RELATED TEMP.	ALLOW. PRESSURE	RELATED TEMP.	ALLOW. PRESSURE	RELATED TEMP.	ALLOW. PRESSURE	RELATED TEMP.
16 bar	-10 / 50 ºC	16 bar	-10 / 50 ºC	40 bar	-10 / 50 ºC	16 bar	-10 / 50 ºC	40 bar	-10 / 50 ºC
14,7 bar	200 ºC	13,3 bar	200 ºC	33,3 bar	200 ºC	13,4 bar	200 ºC	33,7 bar	200 ºC
13,9 bar	250 ºC	12,1 bar	250 ºC	27,6 bar	300 ºC	12,7 bar	250 ºC	29,7 bar	300 ºC
12,8 bar	300 ºC	11 bar	300 ºC	25,7 bar	350 ºC	11,8 bar	300 ºC	28,5 bar	350 ºC
11,2 bar	350 ºC	10,2 bar	350 ºC	23,8 bar	400 ºC	11,4 bar	350 ºC	27,4 bar	400 ºC

* Rating according to EN 1092-1:2018; ** Rating according to EN 1092-2:2007.

BONNET DESIGN

STANDARD	EXTENDED
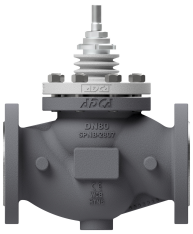	
-10 to 250 ºC	Above 250 ºC

TRIM DESIGN

UNBALANCED TRIM	BALANCED TRIM	LOW NOISE (FD1)
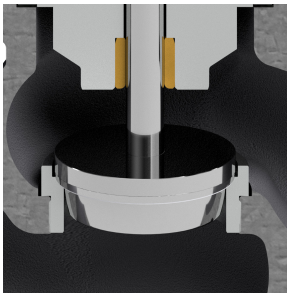	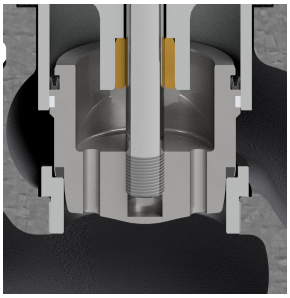	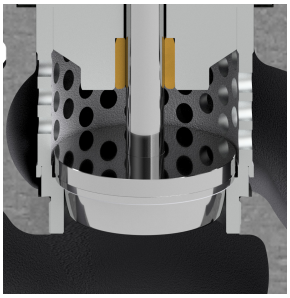

LRQA CERTIFIED ISO 9001

STEM SEALING

PTFE/GR V-RINGS (V1.2)	PTFE V-RINGS (V2.2)	EPDM (EP1)	GRAPHITE (G1)	BELLOWS	
				(BV1)	(BG1)
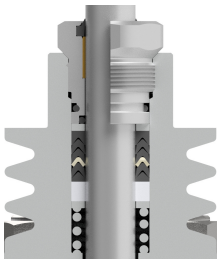	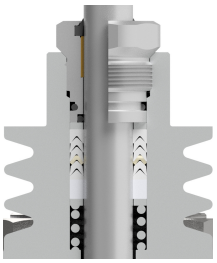	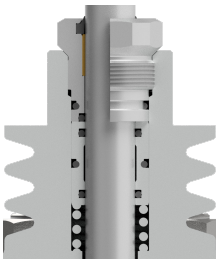	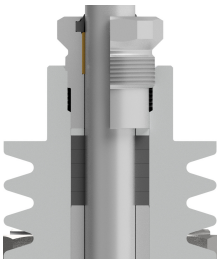	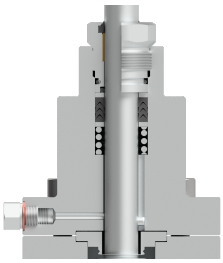	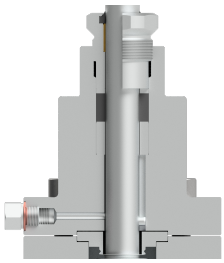
-10 to 220 ºC	-10 to 180 ºC	-10 to 150 ºC *	-10 to 400 ºC	-60 to 220 ºC **	-60 to 400 ºC **

* Up to 180 ºC in steam and hot water applications; ** Maximum operating pressure: 25 bar.

PLUG DESIGN

PARABOLIC

Sealing: Metal to metal
Characteristic: Equal percentage (EQP) or linear (PL)
Flow direction: From below
Rangeability: 50:1 (EQP) or 30:1 (PL)
Leakage: Class IV or Class V, acc. to IEC 60534-4

PARABOLIC (SOFT SEALING)

Sealing: PTFE/GR
Characteristic: Equal percentage (EQP) or linear (PL)
Flow direction: From below
Rangeability: 50:1 (EQP) or 30:1 (PL)
Leakage: Class VI, acc. to IEC 60534-4
Max. temp.: 200 ºC

PERFORATED

Sealing: Metal to metal
Characteristic: Equal percentage (EQP) or linear (PL)
Flow direction: From above (liquids) or from below (gases)
Rangeability: 40:1 (EQP) or 30:1 (PL)
Leakage: Class IV, acc. to IEC 60534-4

PARABOLIC MICROFLOW

Sealing: Metal to metal
Characteristic: Linear (PL)
Flow direction: From below
Rangeability: 30:1
Leakage: Class IV or Class V, acc. to IEC 60534-4

V-PORT GUIDED

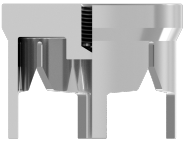

Sealing: Metal to metal
Characteristic: Equal percentage (EQP) or linear (PL)
Flow direction: From below
Rangeability: 30:1
Leakage: Class IV or Class V, acc. to IEC 60534-4

V-PORT GUIDED (SOFT SEALING)

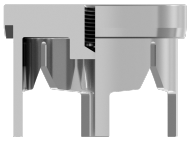

Sealing: PTFE/GR *
Characteristic: Equal percentage (EQP) or linear (PL)
Flow direction: From below
Rangeability: 30:1
Leakage: Class VI, acc. to IEC 60534-4

* In soft sealing valves with seat Ø125 mm to Ø200 mm the PTFE/GR insert is placed on the seat rather than on the valve plug.

We reserve the right to change the design and material of this product without notice.

LRQA CERTIFIED ISO 9001

ADCA

FLOW RATE COEFFICIENTS – PARABOLIC AND V-PORT GUIDED PL AND EQP PLUGS

SIZE	Kvs (m³/h)																			
	0,1 *	0,16 *	0,25 *	0,5 *	1	1,7	2,1	2,7	4	6,3	10	16	25	40	63	100	160	240	370	630
DN 15	●	●	●	●	●	●	●	●	●											
DN 20	●	●	●	●	●	●	●	●	●	●										
DN 25	●	●	●	●	●	●	●	●	●	●	●									
DN 32									●	●	●	●								
DN 40										●	●	●	●							
DN 50											●	●	●	●						
DN 65												●	●	●	●					
DN 80													●	●	●	●				
DN 100														●	●	●	●			
DN 125															●	●	●	●		
DN 150																●	●	●	●	
DN 200																		●	●	●
SEAT Ø (mm)	4				8		12		15	19,2	25	32	38	48	65	76	96	125	150	200
STROKE (mm)	20														30			50		60

* Microflow only available with linear characteristic.

FLOW RATE COEFFICIENTS – PERFORATED PL PLUGS

SIZE	Kvs (m³/h)											
	2,5	4	6,3	10	25	36	50	63	120	180	300	450
DN 15	●											
DN 20	●	●										
DN 25	●	●	●									
DN 32	●	●	●	●								
DN 40		●	●	●	●							
DN 50			●	●	●	●						
DN 65				●	●	●	●					
DN 80					●	●	●	●				
DN 100						●	●	●	●			
DN 125							●	●	●	●		
DN 150								●	●	●	●	
DN 200										●	●	●
SEAT Ø (mm)	15	19,2	25	32	38	48	65	76	96	125	150	200
STROKE (mm)	20						30			50		60

FLOW RATE COEFFICIENTS – PERFORATED EQP PLUGS

SIZE	Kvs (m³/h)											
	2,5	4	6,3	10	16	25	36	50	80	120	250	360
DN 15	●											
DN 20	●	●										
DN 25	●	●	●									
DN 32	●	●	●	●								
DN 40		●	●	●	●							
DN 50			●	●	●	●						
DN 65				●	●	●	●					
DN 80					●	●	●	●				
DN 100						●	●	●	●			
DN 125							●	●	●	●		
DN 150								●	●	●	●	
DN 200										●	●	●
SEAT Ø (mm)	15	19,2	25	32	38	48	65	76	96	125	150	200
STROKE (mm)	20						30			50		60

For conversion Kvs = Cv (US) x 0,865.

We reserve the right to change the design and material of this product without notice.

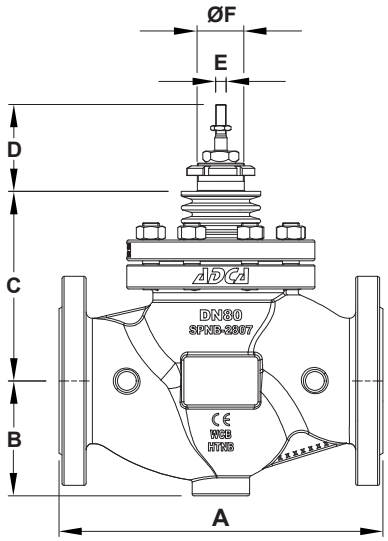

Valve with standard bonnet

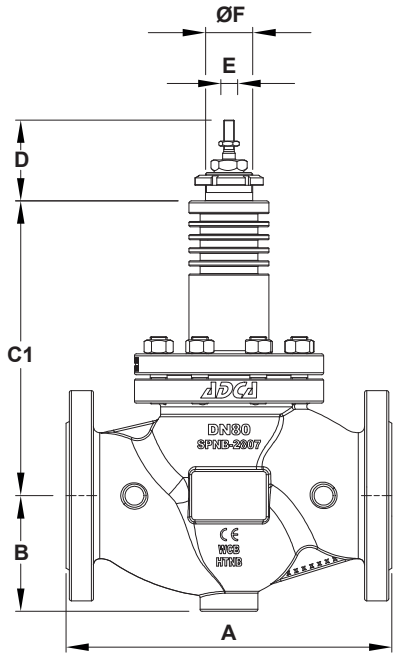

Valve with extended bonnet

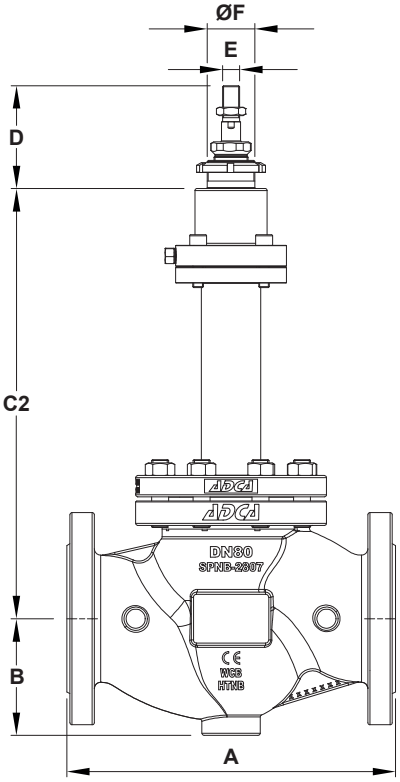

Bellows sealed valve

DIMENSIONS (mm)												
DIMENSION	SIZE											
	DN 15	DN 20	DN 25	DN 32	DN 40	DN 50	DN 65	DN 80	DN 100	DN 125	DN 150	DN 200
A	130	150	160	180	200	230	290	310	350	400	480	600
B	52	53	58	70	75	85	100	110	130	160	180	225
C	104	104	109	109	113	125	176	182	194	210	216	277
C1	169	169	189	189	193	204	276	282	314	315	320	400
C2	295	295	298	298	303	303	415	421	424	590	590	–
D	77						92			110	110	135
E	M10 x 1						M16 x 1,5					M27 x 1,5
ØF	M40 x 1,5						M45 x 1,5			M65 x 2		M80 x 2

Remark: Standard PN 16 DN 65 flanges are supplied with 4 holes. 8 holes, according to EN 1092-1/-2, on request.

WEIGHTS (kg)												
	SIZE											
	DN 15	DN 20	DN 25	DN 32	DN 40	DN 50	DN 65	DN 80	DN 100	DN 125	DN 150	DN 200
STANDARD	5,1	6	6,9	10	12,6	16,4	31,8	38,2	48,9	79,1	105,5	232,3
EXTENDED	5,8	6,7	7,6	10,9	13,9	17,6	32,5	38,9	49,4	81,5	107,3	237,6
BELLOWS	9,3	10,2	10,9	14,1	16,6	20,2	35,6	41,9	53,5	85,9	112,3	–

MAX. PERMISSIBLE ACTUATING THRUSTS (kN)												
	SIZE											
	DN 15	DN 20	DN 25	DN 32	DN 40	DN 50	DN 65	DN 80	DN 100	125	150	200
MAX. THRUST	12						32,5			40,1		89,7

We reserve the right to change the design and material of this product without notice.

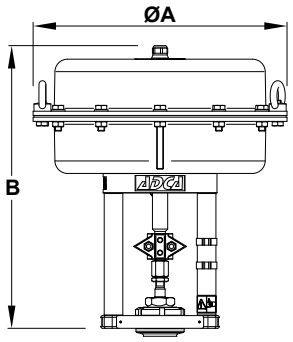

PA

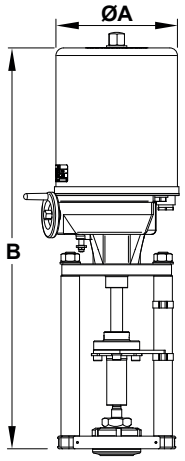

EL

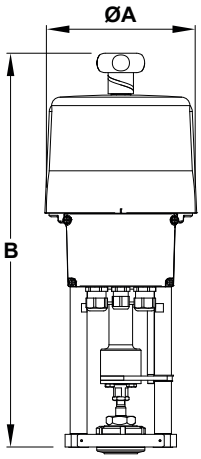

ELS

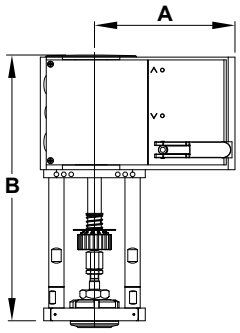

AV

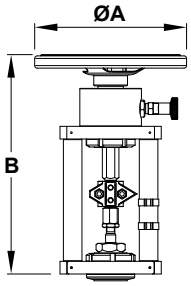

MAH

DIMENSIONS – PA SERIES PNEUMATIC ACTUATORS (mm)						
DIMENSION	**PA10**	**PA25**	**PA40**	**PA80**	**PA80D**	**PA80T**
ØA	170	250	300	405	405	405
B	251	260	325 / 360	505 / 515 / 545	741 / 771	967 / 997
WEIGHT (kg)	6,3	10,1	18,7 / 19,2	50,4 / 55,4 / 59,3	107,7 / 111,6	162 / 166

For more information, please consult IS PA.010 – PA Linear pneumatic actuators.

DIMENSIONS – EL SERIES ELECTRIC ACTUATORS (mm)						
DIMENSION	**EL12**	**EL20**	**EL45**	**EL80**	**EL120**	**EL250**
ØA	129	148	148	188	188	216
B	351	474	474	572	572	668
WEIGHT (kg)	2,1	8	8	13	13	19

For more information, please consult IS EL.012 – EL Linear electric actuators.

DIMENSIONS – ELS SERIES ELECTRIC ACTUATORS (mm)							
DIMENSION	**ELS20**	**ELS45**	**ELS80**	**ELS100**	**ELS140**	**ELS200**	**ELS250**
ØA	180	180	180	180	180	250	250
B	503 / 530	503 / 530	540 / 570	540 / 570	615 / 635	720	720
WEIGHT (kg)	4,5	4,5	7,2	7,2	8	23	23

For more information, please consult IS ELS.020 – ELS Linear electric actuators.

DIMENSIONS – AV SERIES ELECTRIC ACTUATORS (mm)		
DIMENSION	**AVM234S**	**AVF234S**
A	166	166
B	314	314
WEIGHT (kg)	4,1	4,1

For more information, please consult IS AVM.010 – AVM234S-AVF234S Linear electric actuators.

DIMENSIONS – MAH SERIES MANUAL OPERATED ACTUATORS (mm)			
DIMENSION	**MAH180**	**MAH250**	**MAH400**
ØA	180	250	400
B	260	295	428
WEIGHT (kg)	4,8	5,3	18,6

For more information, please consult IS MAH.010 – MAH Manual operated linear actuators.

We reserve the right to change the design and material of this product without notice.

MATERIALS

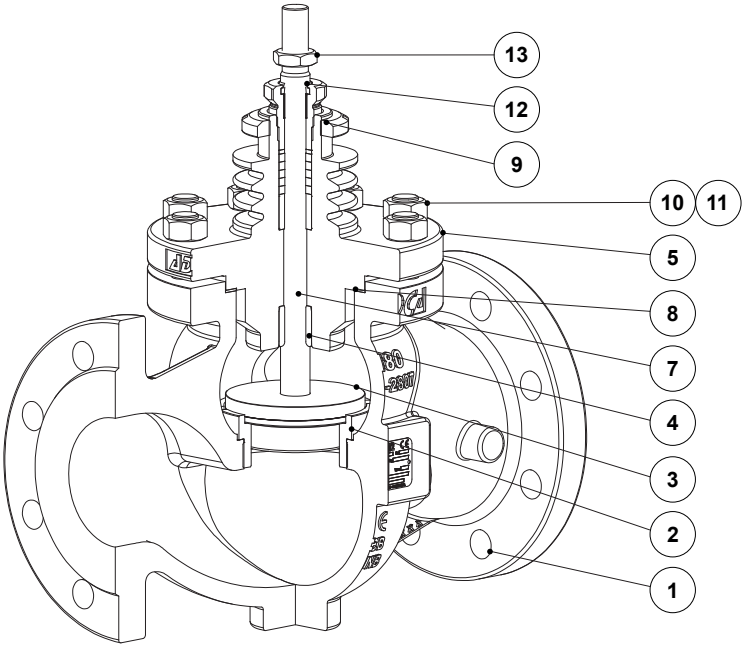

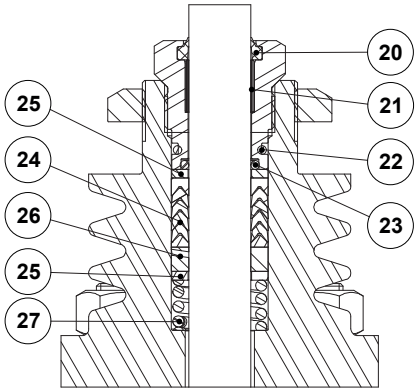

PTFE/GR V-Rings
(V1.2)

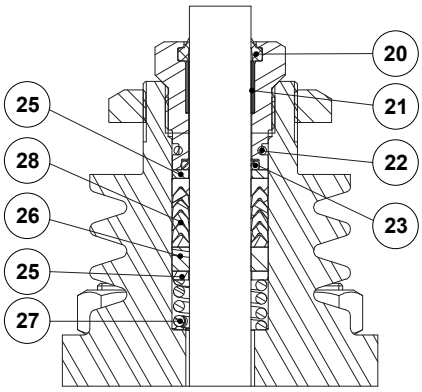

PTFE V-Rings
(V2.2)

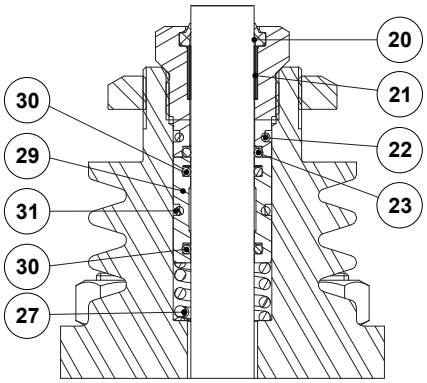

EPDM
(EP1)

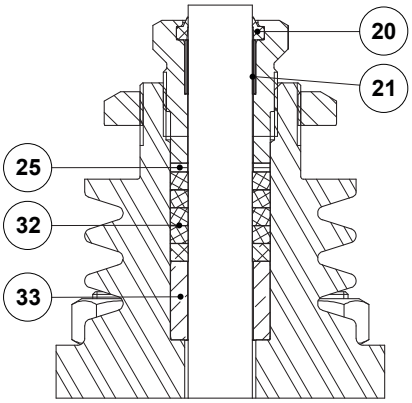

Graphite
(G1)

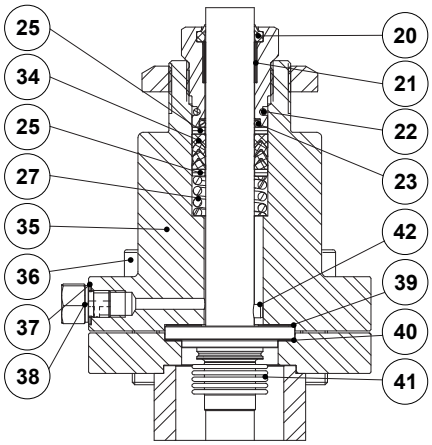

Bellows sealing
(BV1)

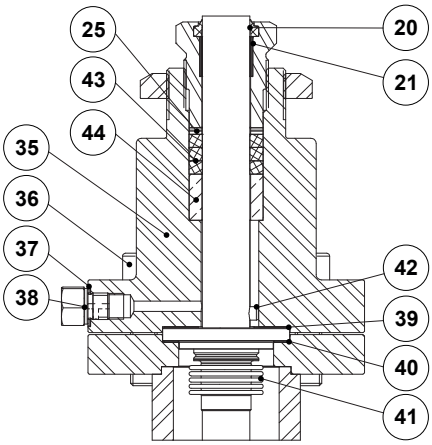

Bellows sealing
(BG1)

We reserve the right to change the design and material of this product without notice.

MATERIALS		
POS. No.	**DESIGNATION**	**MATERIAL**
1	Valve body (V25/2G)	GJS-400-15 / 0.7040
	Valve body (V25/2S)	A216 WCB / 1.0619
	Valve body (V25/2i)	A351 CF8M / 1.4408
2	* Seat	AISI 316L / 1.4404
3	* Valve plug	AISI 316L / 1.4404
4	Stem guide	** Bronze CB1
5	Bonnet (V25/2G and V25/2S)	A351 CF8M / 1.4408; A216 WCB / 1.0619
	Bonnet (V25/2i)	A351 CF8M / 1.4408
7	* Stem	AISI 316 / 1.4401
8	* Gasket	Stainless steel / Graphite
9	Lock nut	A351 CF8 / 1.4308
10	Nut (V25/2G and V25/2S)	EN 10269 steel
	Nut (V25/2i)	Stainless steel A2-70
11	Stud (V25/2G and V25/2S)	EN 10269 steel
	Stud (V25/2i)	Stainless steel A2-70
12	* Packing nut	AISI 303 / 1.4305
13	Lock nut	AISI 302 / 1.4310
20	* Scraper ring	FPM; NBR
21	* Plain bearing	Bronze / PTFE
22	* O-ring	EPDM
23	* O-ring	FPM
24	* Chevron packing set	PTFE
25	Washer	AISI 304 / 1.4301
26	* Stem guide	Stainless steel filled PTFE
27	* Spring	AISI 302 / 1.4310
28	* Chevron packing set	PTFE; Graphite filled PTFE
29	O-ring guide	AISI 304 / 1.4301
30	* O-ring	EPDM
31	* O-ring	EPDM
32	* Packing set	Expanded graphite
33	* Packing spacer	AISI 304 / 1.4301
34	* Safety packing set	Graphite filled PTFE
35	Bellows bonnet (V25/2G and V25/2S)	A105 / 1.0432; AISI 316 / 1.4401
	Bellows bonnet (V25/2i)	AISI 316 / 1.4401
36	Bolt or stud and nut (V25/2G and V25/2S)	EN 10269 steel
	Bolt or stud and nut (V25/2i)	Stainless steel A2-70
37	Gasket	Copper
38	Plug	AISI 316 / 1.4401
39	* Gasket	Stainless steel / Graphite
40	* Gasket	Stainless steel / Graphite
41	* Metal bellows	AISI 316Ti / 1.4571
42	* Locking pin	AISI 303 / 1.4305
43	* Safety packing set	Expanded graphite
44	Packing spacer	AISI 304 / 1.4301

* Available spare parts.
** Can be produced in PEEK (Tmax. 250 ºC) on request.

We reserve the right to change the design and material of this product without notice.

LRQA CERTIFIED ISO 9001

ADCA

ORDERING CODES V25/2 (a)

VALVE MODEL	V2	2	G	S	1	U	1	1	1	E	FD	L	015	
V25/2 – Globe control valve, two-way, straight body	V2													
VALVE SERIES														
Series 2		2												
BODY MATERIAL														
GJS-400-15 / 0.7040 SG iron			G											
A216 WCB / 1.0619 carbon steel			S											
A351 CF8M / 1.4408 stainless steel			I											
BONNET DESIGN														
Standard				S										
Extended				E										
TRIM DESIGN														
Unbalanced trim					1									
Balanced trim					2									
Unbalanced trim with FD1 low noise cage					3									
Balanced trim with FD1 low noise cage					4									
FLOW DIRECTION														
Flow under the plug						U								
Flow over the plug						O								
STEM SEALING														
PTFE/GR V-Rings (V1.2)							1							
Virgin PTFE V-Rings (V2.2)							2							
Graphite (G1)							3							
EPDM (EP1)							4							
Stainless steel bellows with PTFE/GR safety packing (BV1)							8							
Stainless steel bellows with graphite safety packing (BG1)							9							
PLUG DESIGN														
Parabolic								1						
V-port guided (standard for sizes DN 125 to DN 200)								2						
Perforated								3						
VALVE SEALING														
Metal to metal (class IV)									1					
Metal to metal (class V)									2					
Soft sealed with PTFE/GR (class VI)									3					
Stellited seat and plug (class IV)									4					
Stellited seat (class IV)									5					
CHARACTERISTIC														
Equal percentage (EQP)										E				
Linear (PL)										L				
FLOW RATE COEFFICIENT														
Kvs 4											FD			
See table below for other Kvs value codes														
PIPE CONNECTIONS														
Flanged EN 1092-1/-2 PN 16												L		
Flanged EN 1092-1 PN 40												N		
SIZE														
DN 15													015	
DN 20													020	
...														
SPECIAL CONSTRUCTION / ADDITIONAL OPTIONS														
A full description must to be provided and validated in case of a non-standard construction														E

(a) Codification for valve only. For actuator codes, refer to the appropriate information sheet.

FLOW RATE COEFFICIENT CODES

Kvs	0,1	0,16	0,25	0,5	1	1,7	2,1	2,5 *	2,7	4	6,3	10	16	25	36 *	40
Code	M4	M3	M2	M1	R4	R3	R2	PA	R1	FD	FE	FF	FG	FH	PB	FI

Kvs	50 *	63	80 *	100	120 *	160	180 *	240	250 *	300 *	360 *	370	450 *	630	–	–
Code	PC	FJ	PD	FL	PE	FM	PF	FN	PG	PH	PI	FO	PJ	FP	–	–

* Only available with perforated plug design.