LINEAR PNEUMATIC ACTUATORS
PA
(100 cm² to 2400 cm²)

DESCRIPTION

ADCATrol PA series pneumatic multi-spring actuators with rolling diaphragm, offering decreased hysteresis and good linearity throughout the operating range. Available in air to close and air to open versions, for modulating and on/off services.

MAIN FEATURES

Multi-spring compact design.
Actuators with rolling diaphragm.
High spring thrusts and stroking speeds.
Strokes up to 60 mm.
Sizes from 100 cm² to 2400 cm².
Yoke and stem coupling with mounting according to NAMUR (DIN IEC 60534-6-1).
Operation temperature range from -20 ºC to 80 ºC.

OPTIONS AND ACCESSORIES:	Top mounted handwheel. Stroke limiter. Stainless steel construction. Positioners, limit switches, I/P converters, volume boosters, feedback units and others.
USE:	Actuation of ADCATrol control valves, or others on request.
AVAILABLE MODELS:	PA10, PA25, PA40, PA80, PA80D and PA80T – mild steel. PA10i, PA25i and PA40i – stainless steel.

We reserve the right to change the design and material of this product without notice.

SPRING RANGES AND ACTUATOR THRUSTS

ACTUATOR MODEL	DIAPHRAGM AREA (cm²)	RATED STROKE (mm)	SPRING RANGE (bar)	SPRING QTY.	SPRING FORCE AT 0 mm TRAVEL (N)	SPRING FORCE AT RATED TRAVEL (N)	ACTUATOR FORCE (N) IN RELATION TO MOTIVE AIR PRESSURE (bar)							MAX. AIR SUPPLY (bar)
							1,4	2	3	3,5	4	5	6	
PA10	100	20	0,2 – 1 **(a)**	1	200	1000	400	1000	2000	2500	3000	4000	5000	6
			1 – 2	1	1000	2000	–	–	1000	1500	2000	3000	4000	
			2 – 4	1	2000	4000	–	–	–	–	–	1000	2000	
PA25	250	20	0,2 – 1 **(a)**	4	500	2500	1000	2500	5000	6250	7500	10000	12500	
			0,4 – 2 **(a)**	8	1000	5000	–	–	2500	3750	5000	7500	10000	
			1 – 2	4	2500	5000	–	–	2500	3750	5000	7500	10000	
			1,5 – 3	6	3750	7500	–	–	–	1250	2500	5000	7500	
			2 – 4	8	5000	10000	–	–	–	–	–	2500	5000	
PA40	400	30	0,2 – 1 **(a)**	4	800	4000	1600	4000	8000	10000	12000	16000	20000	
			0,4 – 2 **(a)**	8	1600	8000	–	–	4000	6000	8000	12000	16000	
			1 – 2	4	4000	8000	–	–	4000	6000	8000	12000	16000	
			1,5 – 3	6	6000	12000	–	–	–	2000	4000	8000	12000	
			2 – 4	8	8000	16000	–	–	–	–	–	4000	8000	
			2,7 – 4,6	8	10800	18400	–	–	–	–	–	1600	5600	
PA80	800	30 60	0,2 – 1 **(a)**	4	1600	8000	3200	8000	16000	20000	24000	32000	40000	
			0,4 – 2 **(a)**	8	3200	16000	–	–	8000	12000	16000	24000	32000	
			1 – 2	4	8000	16000	–	–	8000	12000	16000	24000	32000	
			1,5 – 3	6	12000	24000	–	–	–	4000	8000	16000	24000	
			2 – 4	8	16000	32000	–	–	–	–	–	8000	16000	
PA80D	1600	60	0,2 – 1 **(a)**	8	3200	16000	6400	16000	32000	40000	48000	64000	80000	
			0,4 – 2 **(a)**	16	6400	32000	–	–	16000	24000	32000	48000	64000	
			1 – 2	8	16000	32000	–	–	16000	24000	32000	48000	64000	
			1,5 – 3	12	24000	48000	–	–	–	8000	16000	32000	48000	
			2 – 4	16	32000	64000	–	–	–	–	–	16000	32000	
PA80T	2400	60	0,2 – 1 **(a)**	12	4800	24000	9600	24000	48000	60000	72000	96000	120000	
			0,4 – 2 **(a)**	24	9600	48000	–	–	24000	36000	48000	72000	96000	
			1 – 2	12	24000	48000	–	–	24000	36000	48000	72000	96000	
			1,5 – 3	18	36000	72000	–	–	–	12000	24000	48000	72000	
			2 – 4	24	48000	96000	–	–	–	–	–	24000	48000	

(a) Actuator with 25% additional possible spring compression, allowing setting of 0,4 – 1,2 bar (0,2 – 1 bar) and 0,8 – 2,4 (0,4 – 2 bar) operating ranges.

We reserve the right to change the design and material of this product without notice.

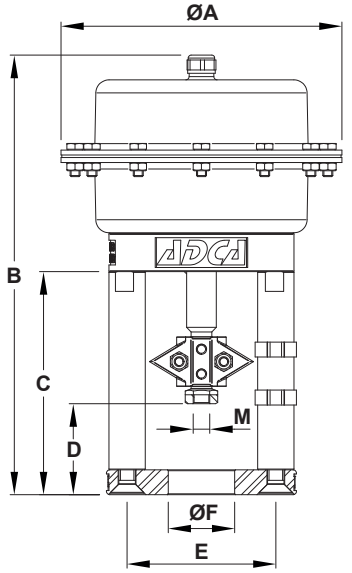

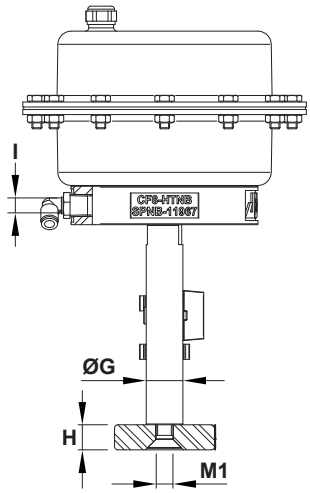

DIMENSIONS (mm)												
MODEL	**ØA**	**B**	**C**	**D**	**E**	**ØF**	**ØG**	**H**	**I**	**M ***	**M1**	**WEIGHT (kg)**
PA10	170	251	135	55	90	40,5	22	15	1/4"	M10 x 1	M10	6,3
PA25	250	260	135	55	90	40,5	22	15	1/4"	M10 x 1	M10	10,1
PA40	300	325 / 360	160 / 195	68	100 / 110	40,5 / 45	22	15	1/4"	M10 x 1 / M16 x 1,5	M10	18,7 / 19,2

* Depending on valve stem thread. Can be course or fine thread. Other dimensions on request.
Remarks: Stem coupling, yoke dimensions and design may vary depending on the ADCATrol control valve model. Refer to its corresponding information sheet or consult the manufacturer.
Mild steel and stainless steel construction share the same dimensions.

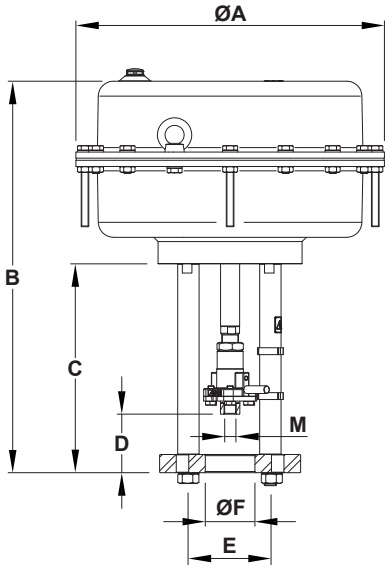

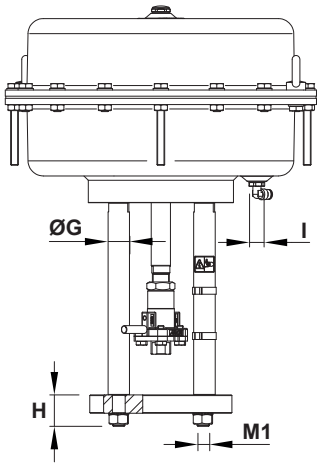

DIMENSIONS (mm)												
MODEL	**ØA**	**B**	**C**	**D**	**E**	**ØF**	**ØG**	**H**	**I**	**M ***	**M1**	**WEIGHT (kg)**
PA80	405	505 / 515 / 545	265 / 274 / 304	70 / 87 / 113	110 / Ø155	45 / 65 / 80	22 / 28	30 / 40	3/8"	M16 x 1,5 / M27 x 1,5	M16	50,4 / 55,4 / 59,3

* Depending on valve stem thread. Can be course or fine thread. Other dimensions on request.
Remarks: Stem coupling, yoke dimensions and design may vary depending on the ADCATrol control valve model. Refer to its corresponding information sheet or consult the manufacturer.

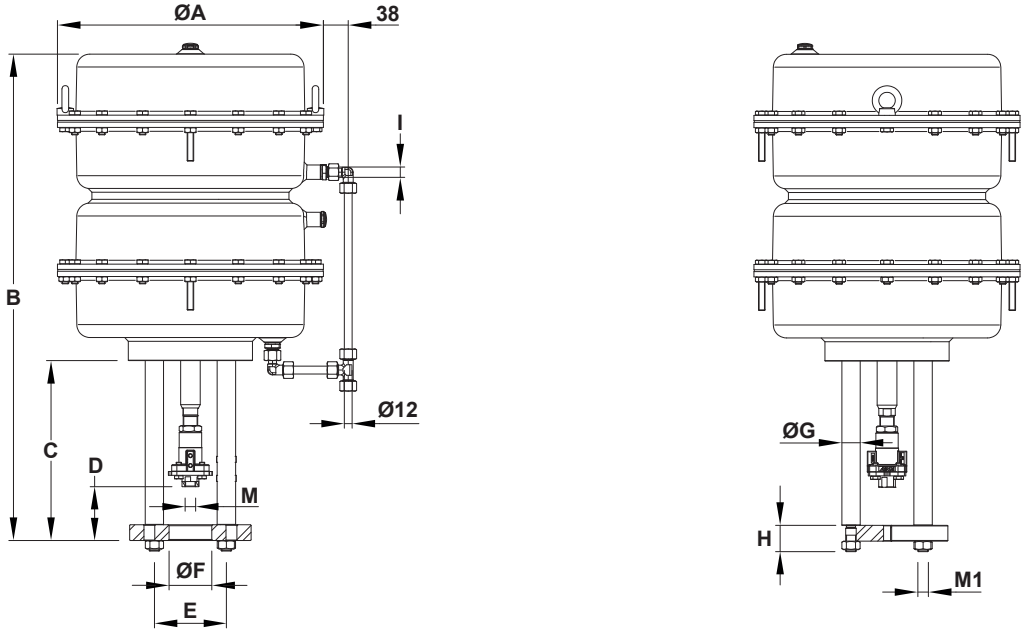

DIMENSIONS (mm)												
MODEL	**ØA**	**B**	**C**	**D**	**ØE**	**ØF**	**ØG**	**H**	**I**	**M ***	**M1**	**WEIGHT (kg)**
PA80D	405	741 / 771	274 / 304	87 / 113	155	65 / 80	28	40	3/8"	M16 x 1,5 / M27 x 1,5	M16	107,7 / 111,6

* Depending on valve stem thread. Can be course or fine thread. Other dimensions on request.
Remarks: Stem coupling, yoke dimensions and design may vary depending on the ADCATrol control valve model. Refer to its corresponding information sheet or consult the manufacturer.

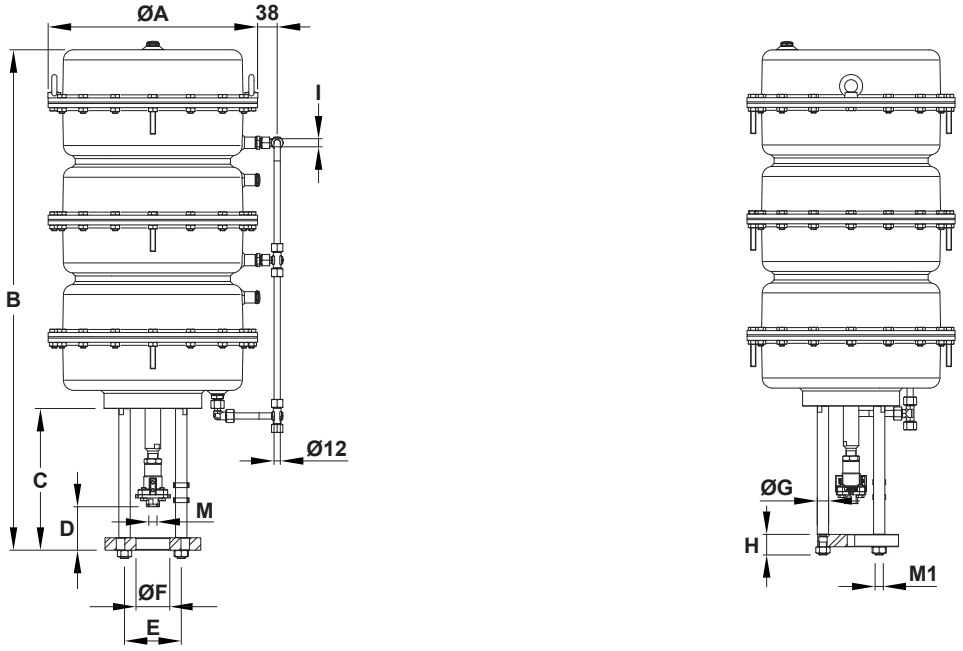

DIMENSIONS (mm)												
MODEL	**ØA**	**B**	**C**	**D**	**ØE**	**ØF**	**ØG**	**H**	**I**	**M ***	**M1**	**WEIGHT (kg)**
PA80T	405	967 / 997	274 / 304	87 / 113	155	65 / 80	28	40	3/8"	M16 x 1,5 / M27 x 1,5	M16	162 / 166

* Depending on valve stem thread. Can be course or fine thread. Other dimensions on request.
Remarks: Stem coupling, yoke dimensions and design may vary depending on the ADCATrol control valve model. Refer to its corresponding information sheet or consult the manufacturer.

We reserve the right to change the design and material of this product without notice.

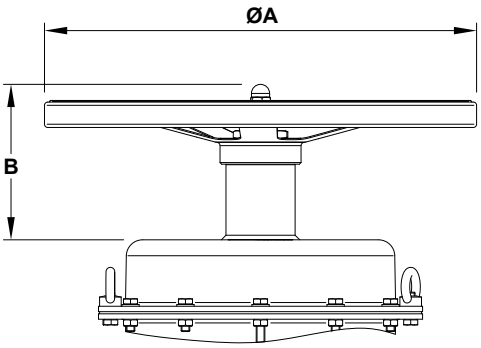

PA10 – PA40

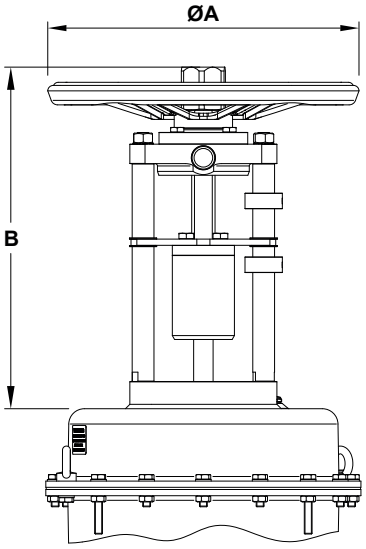

PA80 – PA80D

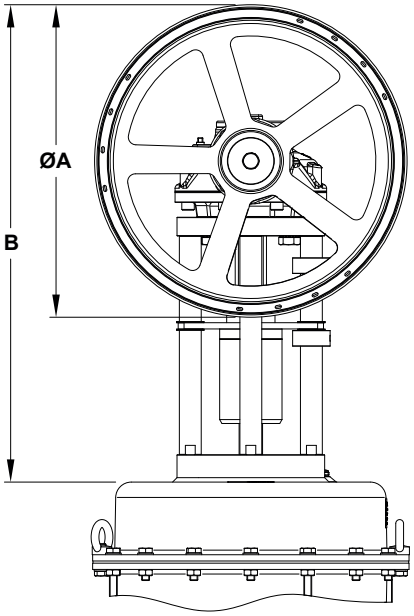

PA80D – PA80T

DIMENSIONS – ACTUATOR WITH TOP MOUNTED HANDWHEEL (mm)			
MODEL	**ØA**	**B**	**WEIGHT (kg)**
PA10	250	103* / 139**	8,5
PA25	250	103* / 139**	12,2
PA40	400	144* / 175**	21,5
PA80	400	439	76,9
PA80D	400	439	136,2
PA80D	400	611	142
PA80T	400	611	200

* Air to open (stem extends by spring force); ** Air to close (stem retracts by spring force).

We reserve the right to change the design and material of this product without notice.

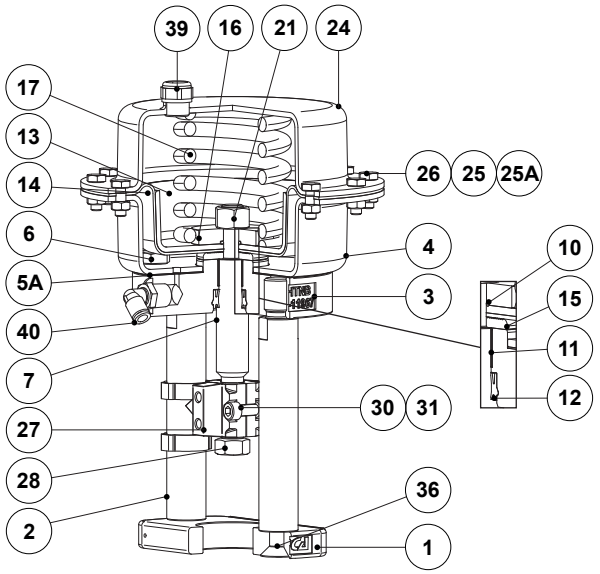

PA10

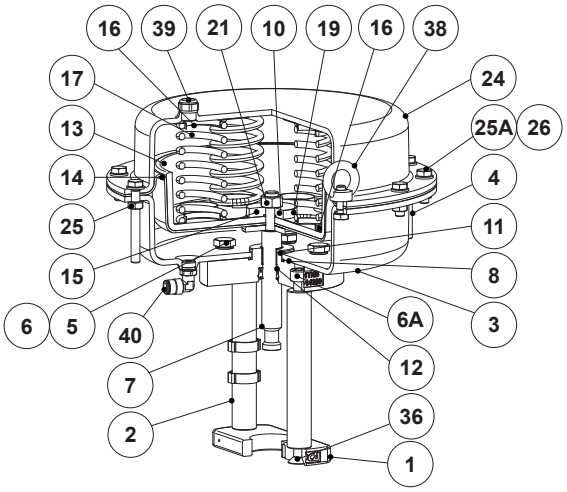

PA25 and PA40

MATERIALS			
POS. No.	**DESIGNATION**	**PA10, PA25 and PA40**	**PA10i, PA25i and PA40i**
1	Lower actuator flange	A351 CF8 / 1.4308	A351 CF8 / 1.4308
2	Yoke columns	C45E / 1.1191	AISI 304 / 1.4301
3	Upper actuator flange	A351 CF8 / 1.4308	A351 CF8 / 1.4308
4	Lower actuator cover	DD13 / 1.0335	AISI 304 / 1.4301
5	Washer	Zinc plated steel	Zinc plated steel
5A	Gasket	NBR	NBR
6	Bolt	Zinc plated steel	Stainless steel A2-70
6A	Bolt	–	–
7	Actuator stem	AISI 316 / 1.4401	AISI 316 / 1.4401
8	* O-ring	NBR	NBR
10	* O-ring	NBR	NBR
11	* Plain bearing	Steel / PTFE	Steel / PTFE
12	* Seal ring	Polyurethane	Polyurethane
13	Diaphragm plate	DD13 / 1.0335	DD13 / 1.0335
14	* Diaphragm	Reinforced NBR	Reinforced NBR
15	Diaphragm disk	C45E / 1.1191	C45E / 1.1191
16	Spring guide	AISI 304 / 1.4301	AISI 304 / 1.4301
17	* Spring	Spring steel	Spring steel
19	Spacer	AISI 316 / 1.4401	AISI 312 / 1.4401
21	Nut	Zinc plated steel	Zinc plated steel
24	Upper actuator cover	DD13 / 1.0335	AISI 304 / 1.4301
25	Nut	Zinc plated steel	Stainless steel A2-70
25A	Washer	Zinc plated steel	Stainless steel A2-70
26	Bolt	Zinc plated steel	Stainless steel A2-70
27	Coupling / Travel indicator	A351 CF8 / 1.4308	A351 CF8 / 1.4308
28	Adaptor	AISI 304 / 1.4301	AISI 304 / 1.4301
30	Bolt	Zinc plated steel	Stainless steel A2-70
31	Nut	Zinc plated steel	Stainless steel A2-70
36	Bolt	Zinc plated steel	Stainless steel A2-70
38	Eyebolt	Zinc plated steel	AISI 304 / 1.4301
39	Vent plug	Brass; Plastic	Brass; Plastic
40	Fitting	Zinc plated steel; Plastic	Zinc plated steel; Plastic

* Available spare parts.

We reserve the right to change the design and material of this product without notice.

MATERIALS

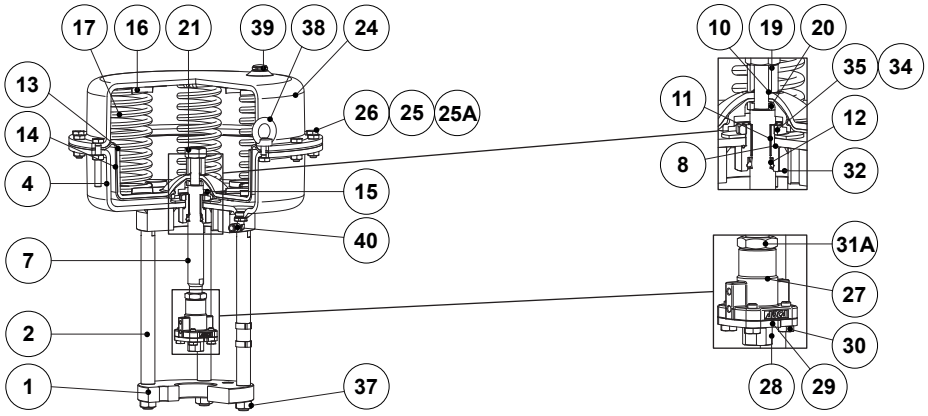

PA80

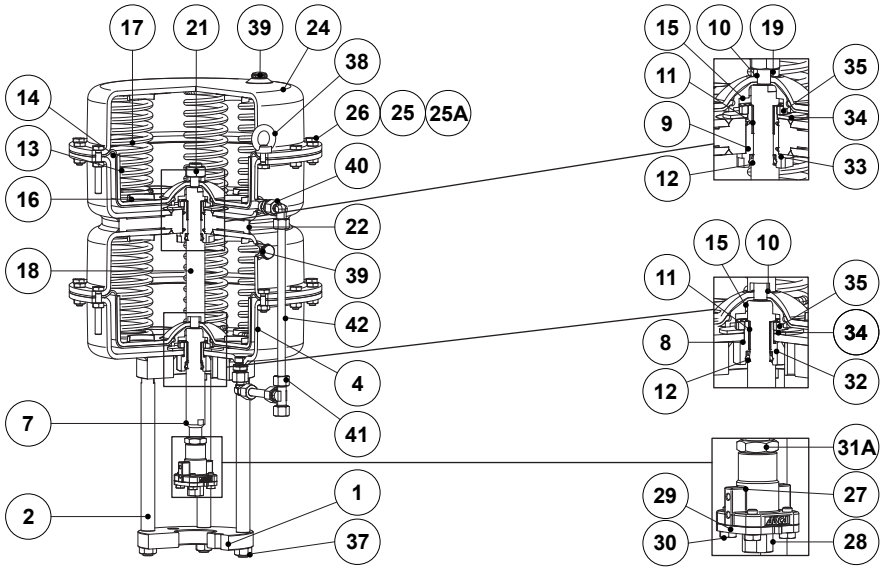

PA80D

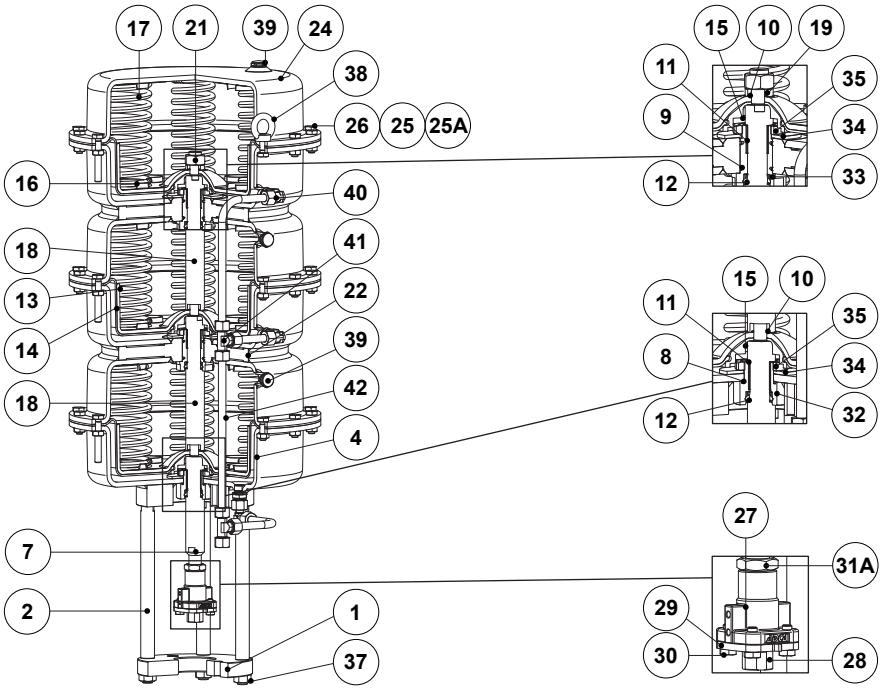

PA80T

We reserve the right to change the design and material of this product without notice.

MATERIALS				
POS. No.	**DESIGNATION**	**PA80**	**PA80D**	**PA80T**
1	Lower actuator flange	S235JR / 1.0038	S235JR / 1.0038	S235JR / 1.0038
2	Yoke columns	C45E / 1.1191	C45E / 1.1191	C45E / 1.1191
4	Lower actuator cover	DD13 / 1.0335	DD13 / 1.0335	DD13 / 1.0335
7	Actuator stem	AISI 316 / 1.4401	AISI 316 / 1.4401	AISI 316 / 1.4401
8	* O-ring	NBR	NBR	NBR
9	* O-ring	–	NBR	NBR
10	* O-ring	NBR	NBR	NBR
11	* Plain bearing	Steel / PTFE	Steel / PTFE	Steel / PTFE
12	* Seal ring	Polyurethane	Polyurethane	Polyurethane
13	Diaphragm plate	DD13 / 1.0335	DD13 / 1.0335	DD13 / 1.0335
14	* Diaphragm	Reinforced NBR	Reinforced NBR	Reinforced NBR
15	Diaphragm disk	S355JR / 1.0045	S355JR / 1.0045	S355JR / 1.0045
16	Spring guide	DC01 / 1.0330	DC01 / 1.0330	DC01 / 1.0330
17	* Spring	Spring steel	Spring steel	Spring steel
18	Intermediate actuator stem	–	AISI 316 / 1.4401	AISI 316 / 1.4401
19	Spacer	AISI 316 / 1.4401	AISI 316 / 1.4401	AISI 316 / 1.4401
20	Spacer	AISI 316 / 1.4401	–	–
21	Nut	Zinc plated steel	Zinc plated steel	Zinc plated steel
22	Intermediate cover	–	DD13 / 1.0335	DD13 / 1.0335
24	Upper actuator cover	DD13 / 1.0335	DD13 / 1.0335	DD13 / 1.0335
25	Nut	Zinc plated steel	Zinc plated steel	Zinc plated steel
25A	Washer	Zinc plated steel	Zinc plated steel	Zinc plated steel
26	Bolt	Zinc plated steel	Zinc plated steel	Zinc plated steel
27	Coupling / Travel indicator	A351 CF8 / 1.4308	A351 CF8 / 1.4308	A351 CF8 / 1.4308
28	Adaptor	AISI 304 / 1.4301	AISI 304 / 1.4301	AISI 304 / 1.4301
29	Coupling flange	AISI 304 / 1.4301	AISI 304 / 1.4301	AISI 304 / 1.4301
30	Bolt	Zinc plated steel	Zinc plated steel	Zinc plated steel
31A	Nut	Zinc plated steel	Zinc plated steel	Zinc plated steel
32	* Stem guide	AISI 316L / 1.4404	AISI 316L / 1.4404	AISI 316L / 1.4404
33	Intermediate stem guide	–	AISI 316L / 1.4404	AISI 316L / 1.4404
34	* Belleville washer	Spring steel	Spring steel	Spring steel
35	Stem guide lock nut	C45E / 1.1191	C45E / 1.1191	C45E / 1.1191
37	Nut	Zinc plated steel	Zinc plated steel	Zinc plated steel
38	Eyebolt	Zinc plated steel	Zinc plated steel	Zinc plated steel
39	Vent plug	Brass; Plastic	Brass; Plastic	Brass; Plastic
40	Fitting	Zinc plated steel	Zinc plated steel	Zinc plated steel
41	Compression fitting	–	Zinc plated steel	Zinc plated steel
42	Tube	–	AISI 304 / 1.4301	AISI 304 / 1.4301

* Available spare parts.

We reserve the right to change the design and material of this product without notice.

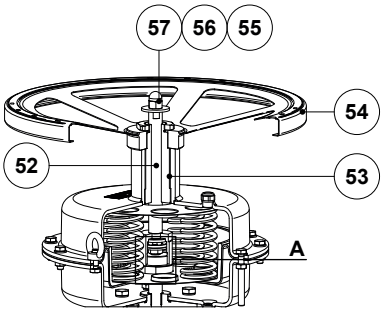

PA10 – PA40

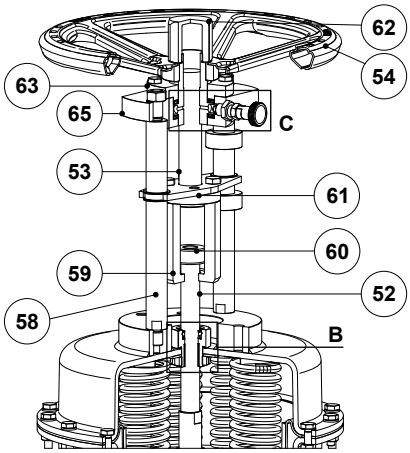

PA80 – PA80D

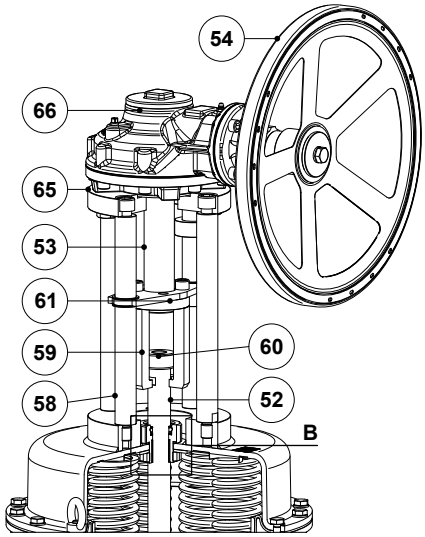

PA80D – PA80T
Top mounted handwheel with worm gear

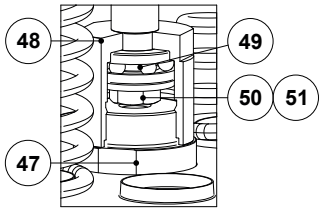

Detail A

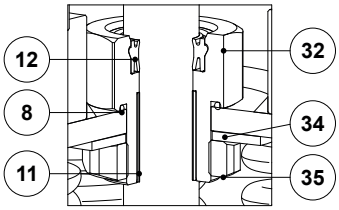

Detail B

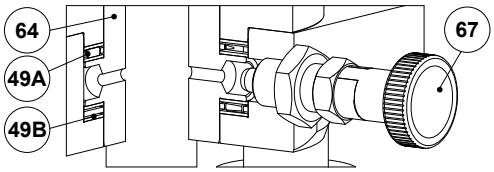

Detail C

MATERIALS – ACTUATOR WITH TOP MOUNTED HANDWHEEL		
POS. No.	**DESIGNATION**	**MATERIAL**
47	Nut	AISI 316 / 1.4401
48	Nut	AISI 316 / 1.4401
49	Bearing	Steel
49A	Axial needle bearing	Steel
49B	Axial washer	Steel
50	Washer	Zinc plated steel
51	Bolt	AISI 304 / 1.4301
52	Stem	AISI 316 / 1.4401
53	Threaded spindle	Hardened stainless steel
54	Handwheel	Steel
55	Washer	Zinc plated steel
56	Locknut	C45E / 1.1191
57	Nut	AISI 304 / 1.4301
58	Yoke column	C45E / 1.1191
59	Bushing	C45E / 1.1191
60	Nut	AISI 304 / 1.4301
61	Bracket	AISI 304 / 1.4301
62	Top cap	C45E / 1.1191
63	Cover	C45E / 1.1191
64	Stem nut	Bronze CB1
65	Flange coupling	S235JR / 1.0038
66	Worm gear	–
67	Locking pin	Steel

We reserve the right to change the design and material of this product without notice.

LRQA CERTIFIED ISO 9001

ACCESSORIES *

AIR FILTER REGULATOR

SOLENOID VALVE

LIMIT SWITCH BOX

MECHANICAL LIMIT SWITCHES

POSITION FEEDBACK UNIT

I/P CONVERTER

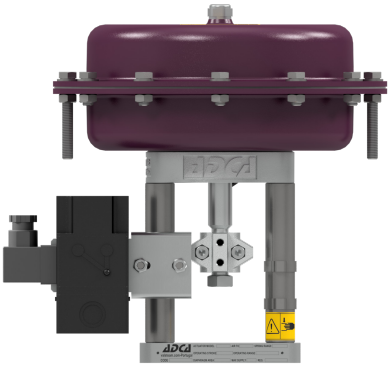

* Different models are available within each category.

POSITIONERS *

PNEUMATIC

ELECTRO-PNEUMATIC

* Different models are available within each category.

ORDERING CODES PA									
GROUP DESIGNATION	**PA**	**010**	**S**	**R**	**2**	**A**	**XX**	**A1**	
PA series – Linear pneumatic actuator	**PA**								
ACTUATOR MODEL									
PA10 (100 cm²)		**010**							
PA25 (250 cm²)		**025**							
PA40 (400 cm²)		**040**							
PA80 (800 cm²)		**080**							
PA80D (1600 cm²)		**80D**							
PA80T (2400 cm²)		**80T**							
ACTUATOR CONSTRUCTION									
Mild steel construction (standard)			**S**						
Stainless steel construction			**I**						
DIRECTION OF ACTION									
Air to open (stem extends by spring force)				**R**					
Air to close (stem retracts by spring force)				**D**					
RATED STROKE									
20 mm					**2**				
30 mm					**3**				
60 mm					**6**				
SPRING RANGE (a)									
0,2 to 1 bar						**A**			
0,4 to 2 bar						**B**			
1 to 2 bar						**D**			
1,5 to 3 bar						**G**			
2 to 4 bar						**I**			
2,7 to 4,6 bar						**K**			
OPTIONS									
None							**XX**		
Top mounted handwheel **(b)**							**HX**		
Top mounted handwheel with worm gear							**GX**		
Stroke limiter							**LX**		
YOKE DESIGN AND COUPLING									
ADCATrol VPC26, V16/2, V25/2 and V303 series (DN 15 to DN 50 – 1/2" to 2")								**A1**	
ADCAPure V926H, V926A (1/2" to 21/2") and V928 series (DN 15 to DN 50)								**A3**	
ADCATrol V16/2 series (DN 65 to DN 100 – 21/2" to 4")								**B1**	
ADCATrol V25/2 and V303 series (DN 65 to DN 100 – 21/2" to 4")								**B2**	
ADCAPure V926H (3" and 4") and V928 series (DN 65 to DN 100)								**B3**	
ADCATrol V25/2 series (DN 125 to DN 150 – 5" to 6")								**C2**	
ADCATrol V25/2 series (DN 200 – 8")								**D2**	
Other ADCATrol valves **(c)**								**XX**	
SPECIAL CONSTRUCTION / ADDITIONAL OPTIONS									
A full description must to be provided and validated in case of a non-standard construction									**E**

(a) Not every spring range/stroke combination is available for each actuator model.
(b) Not available in actuators with stainless steel construction (e.g. PA10i).
(c) Exact model and size must be specified – consult the manufacturer.
How to size: For selection of suitable actuator to use with ADCATrol control valves, consult IS PV15.00 – Maximum permissible pressure drops for ADCATrol control valves – or consult the manufacturer.