LIMIT SWITCH BOXES
LSB1

DESCRIPTION

The ADCATrol LSB1 is a limit switch box designed for mounting on pneumatic linear or rotary actuators serving as an interface between the valve and the control system.
Featuring a flexible and compact design, these devices are essential components in industrial and process control systems, playing a pivotal role in enhancing safety, efficiency, and control by providing accurate and real-time feedback on valve performance. This allows quick responses to changes in process conditions or emergencies while reducing the need for manual intervention.
The shaft of the LSB1 is connected to the shaft of the actuator and will turn when the actuator moves. The cams which are mounted on the shaft of the limit switch box will then activate the switches responsible for transmitting the electrical signals.

MAIN FEATURES

Flexible, compact and easy to install.
Highly configurable, with numerous options for switches.
Can fit up to 4 switches.
IP 67 protection.
ISO 5211 mounting.
Copper free housing for maximum corrosion and pitting protection.
Aluminum or corrosion resistant stainless steel housings.
Open/closed visual indicator (except stainless steel construction).

OPTIONS AND ACCESSORIES:
- ATEX approval.
- Attachment kit for linear actuators acc. to NAMUR (DIN IEC 60534-6-1).
- 1-3 slot type sensors and 1-2 cylindrical sensors available on request.
- Different indicator options, on request.

AVAILABLE MODELS: LSB1.

TECHNICAL DATA	
IP rating	IP 67
Housing material	Aluminium or AISI 316 / 1.4404 stainless steel
Sealing material	EPDM, NBR
Electrical connections	1x M20 x 1,5 with plastic cable gland (2x M20 x 1,5 for stainless steel enclosure)
Weight	Aluminium: 0,6 kg (without attachment kit) Stainless steel: 1,2 kg (without attachment kit)
Mounting orientation	Any

We reserve the right to change the design and material of this product without notice.

DIMENSIONS (mm)

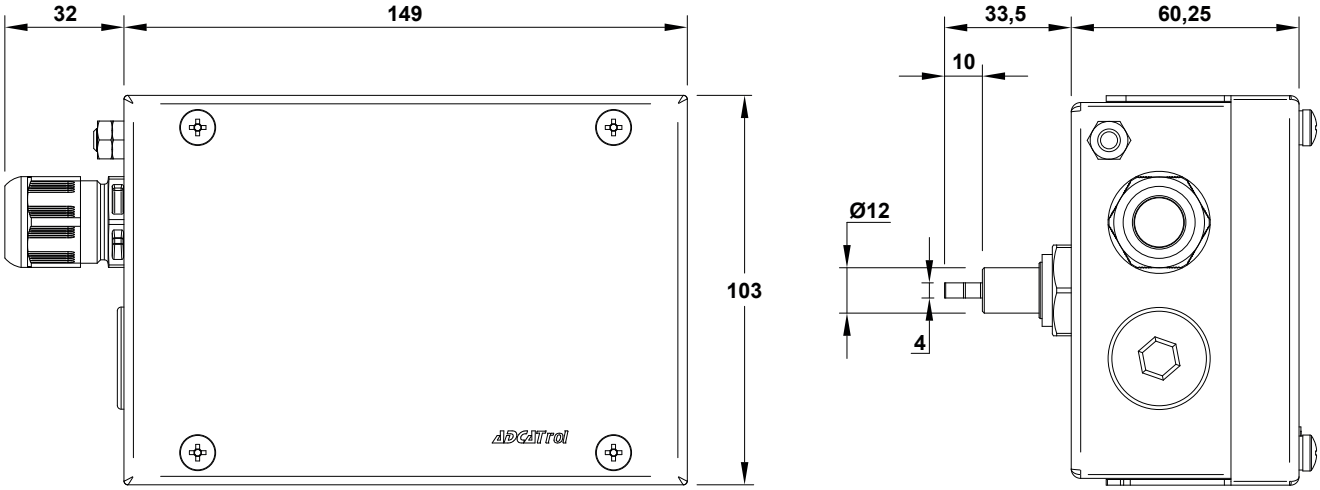

Stainless steel

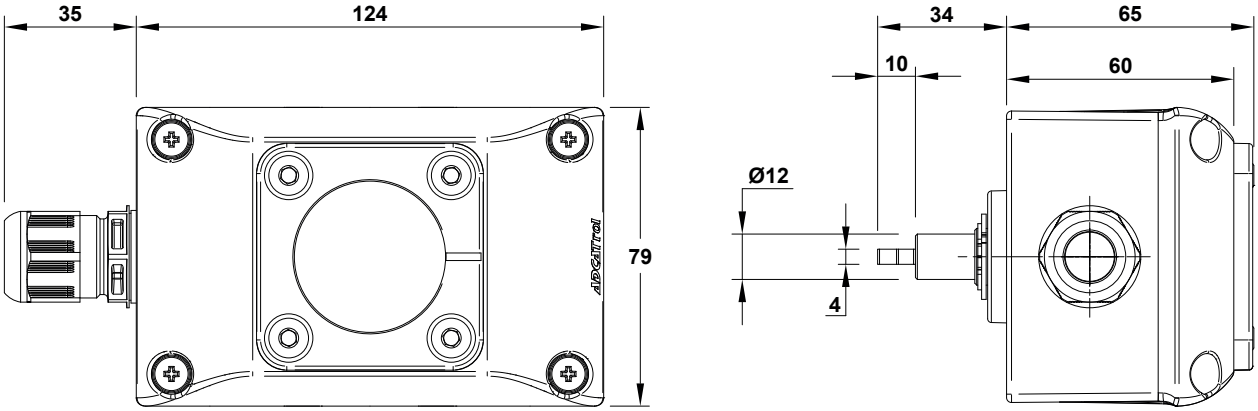

Aluminium

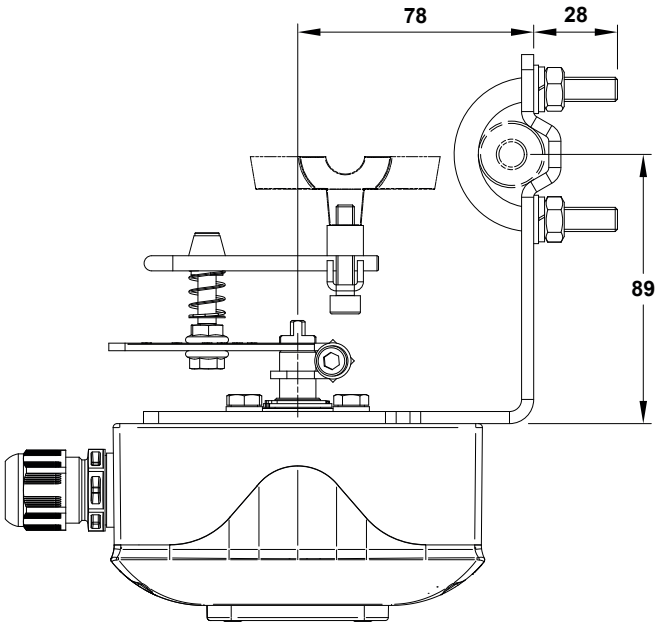

Attachment kit for linear actuators

We reserve the right to change the design and material of this product without notice.

TYPE OF SWITCH			
MODEL	**MECHANICAL SILVER (MS)**	**MECHANICAL GOLD (MG)**	**MECHANICAL GOLD ATEX Ex ia (MG + IA)**
Manufacturer and reference	ZF, D44X (SPDT, NO / NC)	Honeywell, V15H10 (SPDT, NO / NC)	Honeywell, V15H10 (SPST, NO)
Voltage	12 to 250 V AC / DC	5 to 250 V AC / DC	–
Operating current max.	AC: 250 V, 10 A / DC: 24 V, 2,5 A	AC: 250 V, 0,1 A / DC: 24 V, 0,1 A	–
Operating current min.	AC: 250 V, 0,1 A / DC: 24 V, 0,1 A	AC: 250 V, 0,01 A / DC: 24 V, 0,01 A	–
Electrical supply data	–	–	U_i: 30 V DC / I_i: 15 mA / P_i: 35 mW C_i , L_i: negligible
Contacts	Silver	Gold	Gold
SIL Level	SIL 1 - 3 (IEC 61508:2010)	SIL 1 - 3 (IEC 61508:2010)	SIL 1 - 3 (IEC 61508:2010)
ATEX / IECEx	–	–	II 2G Ex ia IIC / IIB T4 / T6 Gb Stainless steel: II 2D Ex ia IIIC T80 °C / T95 °C Db Aluminium: II 2D Ex ia IIIC T80 °C / T110 °C Db
Ex zone	–	–	Zone 1, 2 Zone 21, 22
Ambient temperature	(-40 °C) -25 °C ... +80 °C	(-40 °C) -25 °C ... +80 °C	Stainless steel: T6 / T80 °C: (-40 °C) -25 °C to +70 °C; T5 / T95 °C: (-40 °C) -25 °C to +80 °C Aluminium: (-40 °C) -25 °C to +70 °C (T4: +100 °C)
Dry contact	Only with NO function (Contacts 1+2)	Only with NO function (Contacts 1+2)	–
Max. number of switches	4	4	4

TYPE OF SWITCH				
MODEL	**INDUCTIVE 3 WIRE PNP (IP3)**	**INDUCTIVE 3 WIRE NPN (IN3)**	**INDUCTIVE 2 WIRE (IN2)**	**INDUCTIVE 2 WIRE ATEX Ex ia (IN2 + IA)**
Manufacturer and reference	P+F, NBB2-V3-E2 (PNP, NO)	P+F, NBB2-V3-E0 (NPN, NO)	P+F, NBB3-V3-Z4 (DC, NO)	P+F, NJ2-V3-N (NAMUR opener / NC)
Voltage	10 to 30 V DC	10 to 30 V DC	5 to 60 V DC	8,2 V DC
Operating current	0 to 100 mA	100 mA	4 to 100 mA	≤ 1 mA - actuated ≥ 3 mA - non-actuated
Switching frequency	1000 Hz	1000 Hz	2000 Hz	1000 Hz
No-load supply current I_0	≤ 15 mA	15 mA	–	–
Switching state indicator	LED yellow	LED yellow	LED yellow	–
SIL Level	SIL 1 - 3 (IEC 61508:2010)	SIL 1 - 3 (IEC 61508:2010)	SIL 1 - 3 (IEC 61508:2010)	SIL 1 - 3 (IEC 61508:2010)
ATEX / IECEx	–	–	–	II 2G Ex ia IIC / IIB T4 / T6 Gb II 2D Ex ia IIIC St. steel: T80 °C / T135 °C Db Aluminium: T80 °C / T110 °C Db
Ex zone	–	–	–	Zone 1, 2 Zone 21, 22
Ambient temperature	-25 °C to +70 °C	-25 °C to +70 °C	-25 °C to +80 °C	Stainless steel: T6 / T80 °C: -25 °C to +70 °C; T5 / T95 °C: -25 °C to +80 °C; T4 / T135 °C: -25 °C to +100 °C Aluminium: -25 °C to +70 °C (T4: +100 °C)
Max. number of switches	4	4	4	4

OPTIONS AND ACCESSORIES

MECHANICAL VISUAL POSITION INDICATORS

Mechanical visual position indicator with transparent window

3D visual indicator inside the housing with the possibility to indicate positions of 2-way or 3-way ball valves.

Mechanical visual position indicator with large transparent protruding window and open-closed indication

Large protruding visual indicator inside the cover with OPEN-CLOSED indication for 90° swivel range.

ELECTRICAL CONNECTIONS

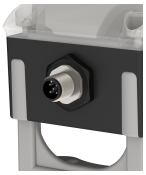

M12 male plug with 5 pins

M12 plug connector 5 polar, male, for quick and simple connection.

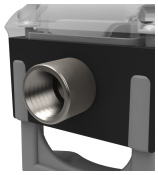

1/2" NPT without cable glands

Thread connection NPT 1/2".

ELECTRICAL CONNECTIONS

INDUCTIVE 3 WIRE PNP (IP3)

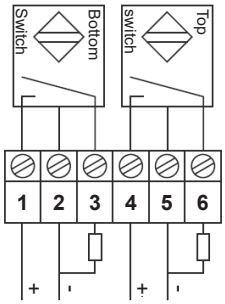

INDUCTIVE 3 WIRE NPN (IN3)

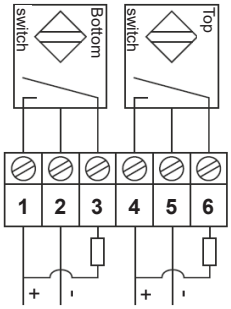

MECHANICAL SILVER (MS) / MECHANICAL GOLD (MG)

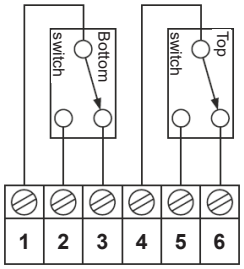

MECHANICAL GOLD ATEX Ex ia (MG + IA)

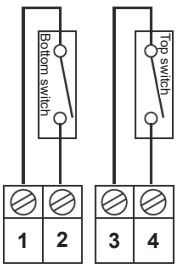

INDUCTIVE 2 WIRE ATEX Ex ia (IN2 + IA)

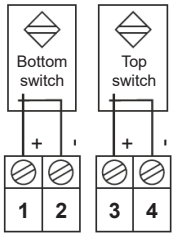

INDUCTIVE 2 WIRE (IN2)

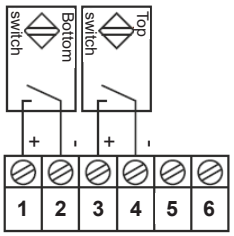

LRQA CERTIFIED ISO 9001

ADCA

ORDERING CODES LSB1									
GROUP DESIGNATION	**LSB1**	**A**	**1**	**MSXX**	**SA**	**1**	**XX**	**P**	
LSB1 – Limit switch box	**LSB1**								
ENCLOSURE MATERIAL									
Aluminium		**A**							
AISI 316 / 1.4401 stainless steel		**I**							
NUMBER OF SWITCHES									
1			**1**						
2			**2**						
3			**3**						
4			**4**						
TYPE OF SWITCH									
Mechanical micro switches, SPDT, NO / NC, with silver plated contacts **(a)**				**MSXX**					
Mechanical micro switches, SPDT, NO / NC, with gold plated contacts				**MGXX**					
Inductive proximity switches, 3 wire, PNP, NO **(a)**				**IP3X**					
Inductive proximity switches, 3 wire, NPN, NO **(a)**				**IN3X**					
Inductive proximity switches, 2 wire				**IN2X**					
EXPLOSION PROTECTION									
Without explosion protection					**SA**				
Ex ia (Zone 1, 2 & Zone 21, 22)					**IA**				
POSITION INDICATOR									
Without visual position indicator (mandatory for stainless steel enclosure)						**0**			
Mechanical visual position indicator with transparent window (standard for aluminium enclosure)						**1**			
Mechanical visual position indicator with transparent protruding window						**3**			
Mechanical visual position indicator with large transparent protruding window and open-closed indication						**4**			
OPTIONS									
None							**XX**		
ELECTRICAL CONNECTIONS									
M20 x 1,5 with plastic cable glands								**P**	
M12 male plug with 5 pins								**M**	
1/2" NPT without cable glands								**C**	
SPECIAL CONSTRUCTION / ADDITIONAL OPTIONS									
A full description must to be provided and validated in case of a non-standard construction									**E**

(a) Not available with Ex ia explosion protection.