LRQA CERTIFIED ISO 9001

ADCA ADCATrol

ELECTRO-PNEUMATIC CONVERTERS
PC25

DESCRIPTION

The ADCATrol PC25 is a compact device which converts a standard analog signal to a standard pneumatic signal, for the change-over between electrical controllers to pneumatic control valves, or from electrical measuring systems to pneumatic controllers.
The PC25 is a force balance device, which converts a 4 to 20 mA input signal into a proportional linear 0,2 to 1 bar output signal, with a respective supply pressure of 1,7 to 5 bar.

MAIN FEATURES

Particularly compact design.
Good dynamic response.
Immune to mechanical vibrations.
Low maintenance and low consumption.
High reliability.
Adjustable output measuring span.

OPTIONS: Pressure gauge on body.
Other output pressure ranges.

AVAILABLE MODELS: PC25.

SIZES: 1/4".

CONNECTIONS: Female threaded NPT.

INSTALLATION: In any position.
See IMI – Installation and maintenance instructions.

TECHNICAL DATA

GENERAL	
Operating temperature	-40 to +85 ºC
IP rating	IP 65
Electric connections	DIN 43650, form A
Pneumatic connections	Female threaded 1/4" NPT
Material	Passivated zinc die-casting epoxy painted, NBR diaphragms, Glass reinforced PA cover
Operating position	Any
Weight	1 kg

PNEUMATIC OUTPUT SIGNAL	
Output pressure	0,2 to 1 bar (others on request)
Flow capacity	> 300 Nl/min, forward & relief
Linearity	≤ 0,5% of span
Hysteresis	≤ 0,5% of span
Response time	< 0,5 seconds for a 10 to 90% or 90 to 10% of output pressure into a 10cc load
Supply sensitivity	< 0,075% span output change per % supply pressure change

AIR SUPPLY *	
Purity	Maximum particle size: 5 µm Maximum particle density: 5 mg/m³
Oil content	Maximum concentration: 1 mg/m³
Supply pressure **	1,7 to 5 bar
Air consumption	2,8 Nl/min @ 1 bar

* Free of oil, water and dust, according to DIN/ISO 8573-1.
** Do not exceed the maximum operating pressure of the actuator!

ANALOG INPUT SIGNAL	
Nominal operating range	4 to 20 mA
Impedance	11 kΩ at 20 mA
Span/zero	Up to 20% of output range, adjustable
Failure mode	Output pressure fails to zero signal state

We reserve the right to change the design and material of this product without notice.

DIMENSIONS (mm)

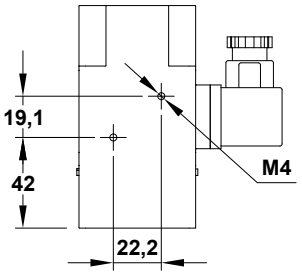

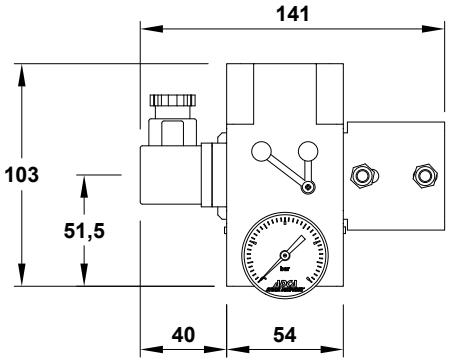

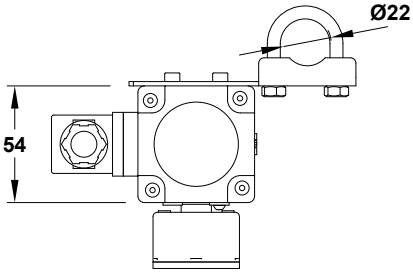

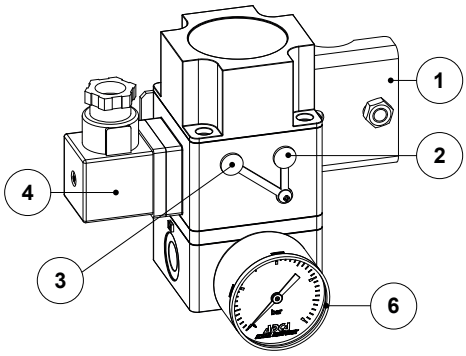

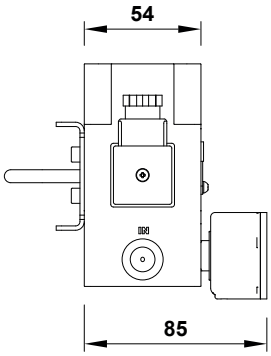

EQUIPMENT	
POS. No.	DESIGNATION
1	Mounting bracket
2	Range adjusting screw
3	Zero adjusting screw
4	Electrical connector
6	Pressure gauge *
7	Filter regulator

* Optional.

CALIBRATION

When the instrument is first installed or after a long downtime period, a moderate zero shift is normal. This is due to the rubber diaphragms which are stretched by the internal springs. After a few operations, the instrument will settle into its normal operating condition. In these circumstances, the instrument should be put to work by alternately applying zero and full scale signals several times. Zero calibration should then be carried out.
Adjust zero control no. 2 (anti-clockwise) to give the minimum required output pressure.
Adjust range control no. 3 (anti-clockwise) to give the maximum required output pressure.

Remark: Reverse acting operation.
About 20 turns of the zero screw may be required to reset the zero point.
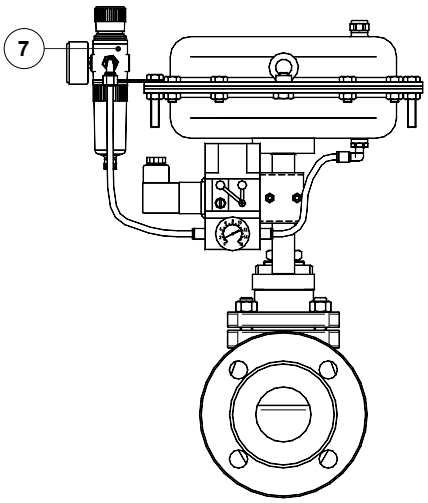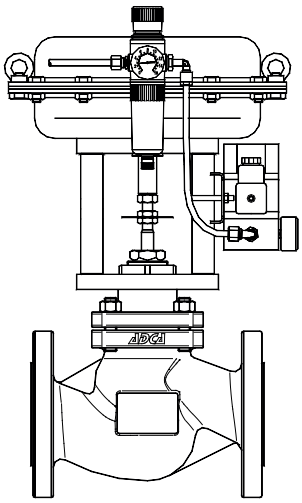
TYPICAL INSTALLATION