LRQA CERTIFIED ISO 9001

GLOBE VALVES
GV32B

DESCRIPTION

The ADCA GV32B bronze inline stop valves are designed for use with steam, water, oil or air applications.

MAIN FEATURES

Rising stem.
PTFE renewable plug.
High quality PTFE steam seals.

USE: Saturated steam, condensate, water, oil, compressed air and other fluids compatible with the construction.

AVAILABLE MODELS: GV32B – bronze.

SIZES: 1/2" to 2".

CONNECTIONS: Female threaded ISO 7 Rp or NPT on request.

INSTALLATION: See IMI – Installation and maintenance instructions.

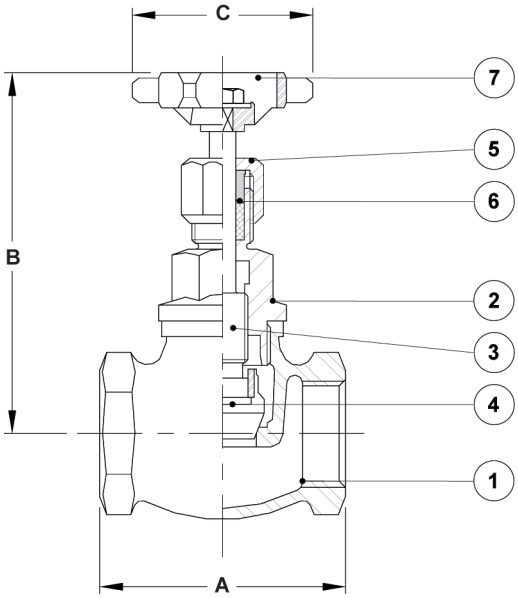

CE MARKING – GROUP 2 (PED – EUROPEAN DIRECTIVE)	
PN 32	**CATEGORY**
1/2" to 11/4"	SEP
11/2" to 2"	1 (CE marked)

BODY LIMITING CONDITIONS	
ALLOWABLE PRESSURE	**RELATED TEMPERATURE**
32 bar	100 ºC
14 bar	198 ºC

FLOW RATE COEFFICIENTS (m³/h)						
SIZE	**1/2"**	**3/4"**	**1"**	**11/4"**	**11/2"**	**2"**
Kvs	2	5	10	16	23	42

For conversion Kvs = Cv (US) x 0,855.

MATERIALS		
POS. No.	**DESIGNATION**	**MATERIAL**
1	Body	Bronze
2	Bonnet	Brass
3	Stem	Brass
4	Plug	Glass filled PTFE
5	Gland nut	Brass
6	Packing	PTFE
7	Handwheel	Aluminium

DIMENSIONS (mm)				
SIZE	**A**	**B**	**C**	**WEIGHT (kg)**
1/2"	57	95	75	0,4
3/4"	65	98	75	0,6
1"	78	114	85	0,9
11/4"	89	138	95	1,4
11/2"	100	159	105	1,8
2"	121	170	120	2,7

We reserve the right to change the design and material of this product without notice.