PRESSURE REDUCING VALVES
PRV25

DESCRIPTION

The ADCA PRV25 is a series of direct acting pressure reducing valves designed for use on steam, compressed air, water and other gases and liquids. These regulators are suitable for reducing steam pressure at the point of use on laundry machines, dyeing, food industries, sterilizers, etc.

MAIN FEATURES

Compact design.
Bellows specially designed for high durability.
Non-rising adjustment knob.
Lockable knob system.
Built-in strainer.

OPTIONS: Rising adjustment knob with lock nut.
Top cap (adjustment screw with cover).
Spring and dome-loading version.
Gauge connection on body.

USE: Saturated steam, compressed air, water and other gases and liquids compatible with the construction.

AVAILABLE MODELS:
PRV25/2S – carbon steel.
PRW25/2S – carbon steel, balanced soft sealing.
PRV25i – stainless steel.
PRW25i – stainless steel, balanced soft sealing.

SIZES: 1/2" to 1"; DN 15 to DN 25.

CONNECTIONS: Female threaded ISO 7 Rp or NPT.
Flanged EN 1092-1 PN 25.
Flanged ASME B16.5 Class 150 or 300.

INSTALLATION: Horizontal installation is recommended.
A "Y" strainer should be installed upstream of the valve.
See IMI – Installation and maintenance instructions.

CE MARKING – GROUP 2 (PED – EUROPEAN DIRECTIVE)	
PN 25	**CATEGORY**
DN 15 to 25	SEP

We reserve the right to change the design and material of this product without notice.

LIMITING CONDITIONS		
MODEL	**PRV25/2S PRV25i**	**PRW25/2S PRW25i**
Body design conditions	PN 25	PN 25
Maximum upstream pressure	17 bar	14 bar
Maximum downstream pressure	8,6 bar	8,6 bar
Minimum downstream pressure	0,14 bar	0,35 bar
Maximum design temperature	210 ºC	80 ºC
Maximum recommended reducing ratio	10:1	10:1
Maximum dome pressure	8,6 bar	8,6 bar

FLOW RATE COEFFICIENTS (m^3/h)			
SIZE	**1/2" – DN 15**	**3/4" – DN 20**	**1" – DN 25**
Kvs	1,7	2,6	3,1

REGULATING RANGES				
SPRING COLOUR	**BLUE ***	**YELLOW ****	**GREEN**	**RED**
Spring loaded	0,35 to 1,7 bar	0,14 to 1,7 bar	1,4 to 4 bar	3,5 to 8,6 bar
Spring and dome-loading ***	–	0,14 to 1,2 bar	1 to 3,5 bar	–

* Only applicable to PRW models; ** Only applicable to PRV models.
*** Ranges shown are related to adjustment spring forces. Total downstream pressure will correspond to the sum of the pressure resulting from the adjusted spring force and the pressure provided by the dome. Not applicable to PRW models.

OPTIONS			
RISING ADJUSTMENT KNOB WITH LOCK NUT	**TOP CAP**	**SPRING AND DOME-LOADING**	**GAUGE CONNECTION**

We reserve the right to change the design and material of this product without notice.

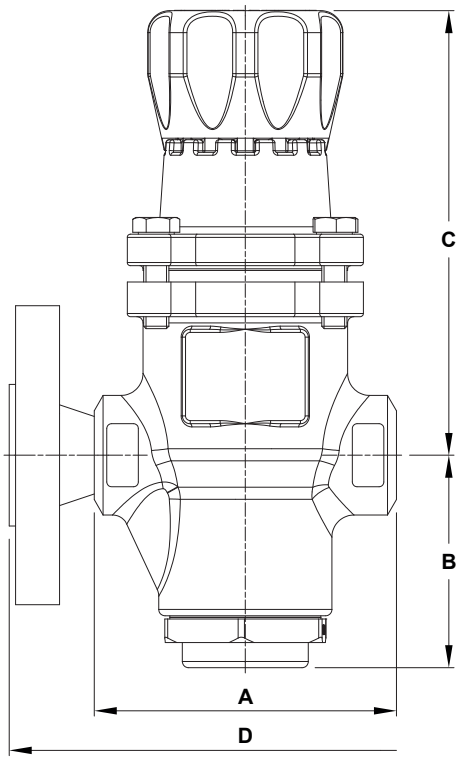

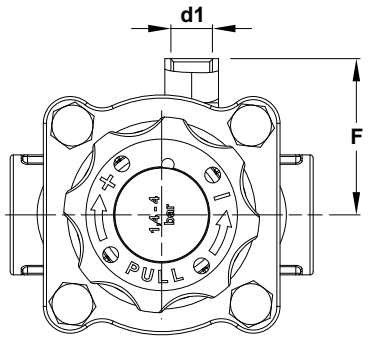

Optional gauge connection

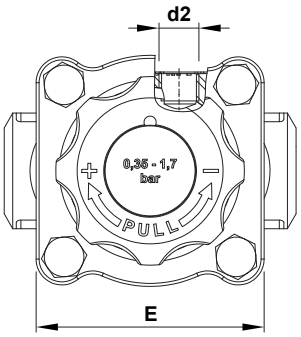

Optional sensing line

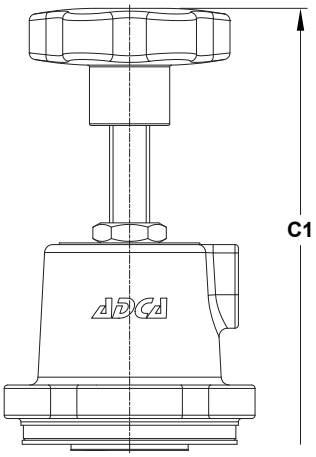

Optional rising adjustment knob

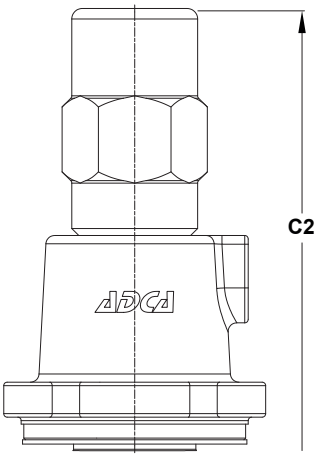

Optional top cap

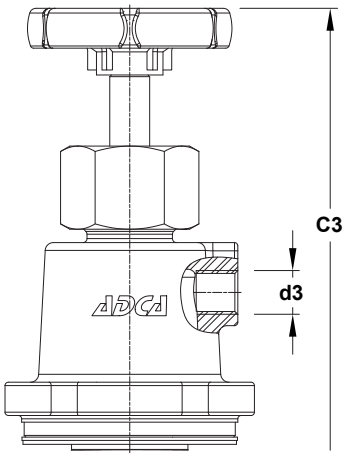

Optional spring and dome version

DIMENSIONS (mm)																		
SIZE	THREADED												PN 25		CLASS 150		CLASS 300	
	A	B	C	C1	C2	C3	d1	d2	d3 *	E	F	WGT. (kg)	D	WGT. (kg)	D	WGT. (kg)	D	WGT. (kg)
1/2" – DN 15	96	68	141	183	178	198	1/4"	1/8"	1/4"	75	49,5	3	150	4,4	150	4	150	4,4
3/4" – DN 20	96	68	141	183	178	198	1/4"	1/8"	1/4"	75	49,5	3	150	5	150	4,4	150	5,3
1" – DN 25	96	68	141	183	178	198	1/4"	1/8"	1/4"	75	49,5	2,9	160	5,5	160	5,1	160	5,9

* Loading gas dome connection.
Remarks: As standard, in versions manufactured with EN 1092-1 PN 25 flanges or ISO Rp threads, connections d1, d2 and d3 are female threaded ISO 228. In versions with ASME B16.5 flanges or NPT threads, these connections are female threaded NPT.

We reserve the right to change the design and material of this product without notice.

MATERIALS

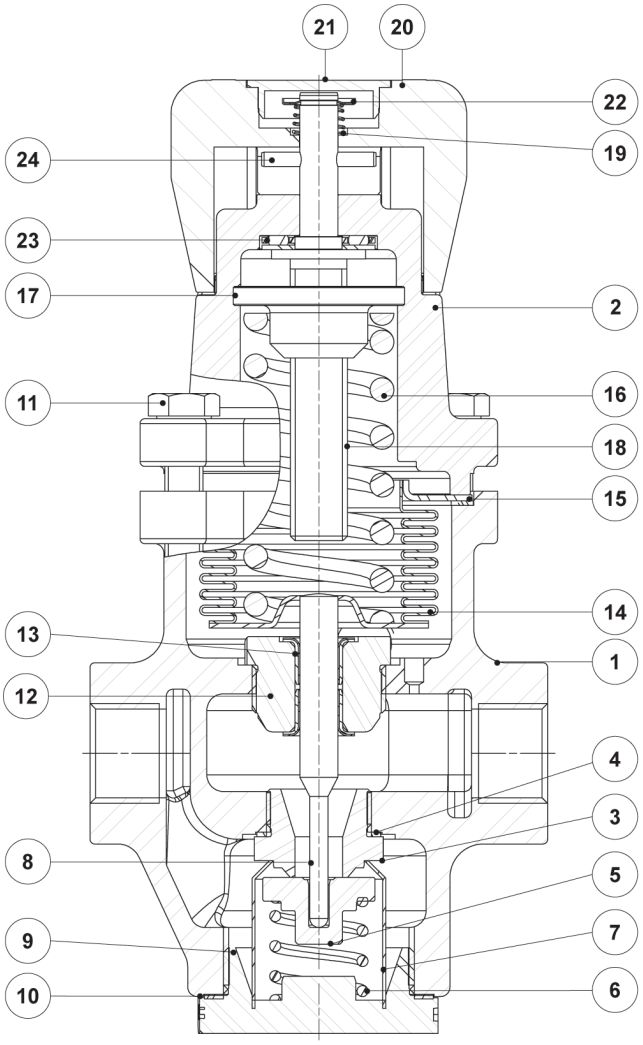

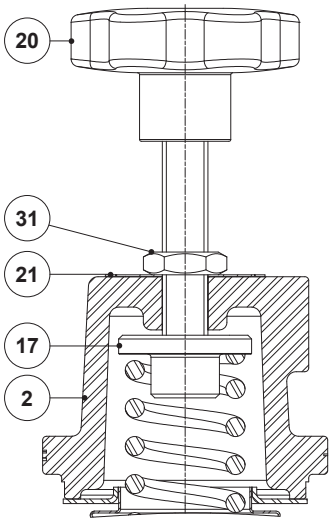

Optional rising adjustment knob

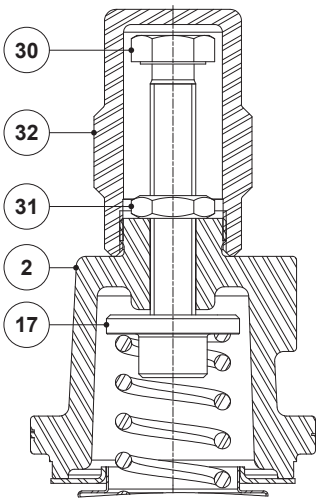

Optional top cap

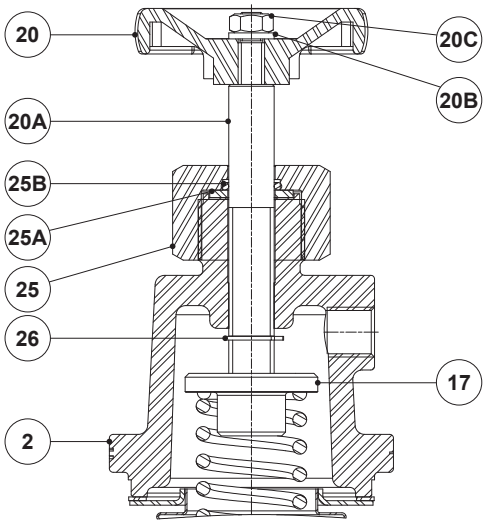

Optional spring and dome-loading version

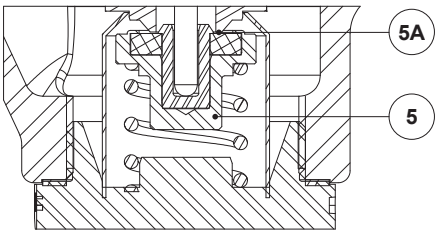

Soft sealing

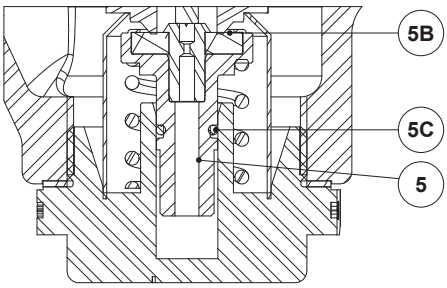

Balanced soft sealing (PRW)

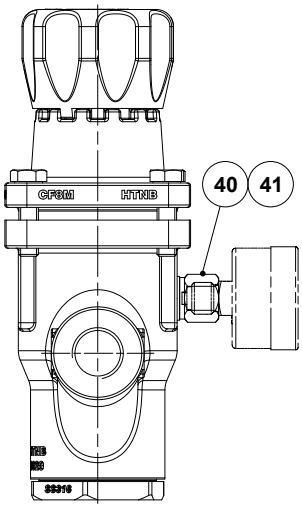

Optional gauge connection

We reserve the right to change the design and material of this product without notice.

MATERIALS		
POS. No.	**DESIGNATION**	**MATERIAL**
1	Body (PRV25/2S and PRW25/2S)	A216 WCB / 1.0619
	Body (PRV25i and PRW25i)	A351 CF8M / 1.4408
2	Cover (PRV25/2S and PRW25/2S)	A216 WCB / 1.0619
	Cover (PRV25i and PRW25i)	A351 CF8M / 1.4408
3	* Seat	AISI 316 / 1.4401
4	* Gasket	Copper
5	* Valve plug	Hardened stainless steel
5A	* Valve head	Graphite filled PTFE
5B	* Valve head	NBR
5C	* O-ring	NBR
6	* Valve spring	AISI 302 / 1.4300
7	* Strainer screen	AISI 304 / 1.4301
8	Pushrod	AISI 316 / 1.4401
9	Bottom cover	A351 CF8M / 1.4408
10	* Gasket	Stainless steel / Graphite
11	Bolt (PRV25/2S and PRW25/2S)	Steel 8.8
	Bolt (PRV25i and PRW25i)	Stainless steel A2-70
12	* Guide bush	AISI 316 / 1.4401
13	* Plain bearing	Bronze filled PTFE
14	* Bellows	AISI 316 Ti / 1.4571
15	* Bellows gasket	Stainless steel / Graphite
16	* Adjustment spring	Steel
17	Top spring plate	Brass
18	Adjustment screw	AISI 304 / 1.4301
19	Spring	AISI 302 / 1.4300
20	Adjustment knob	Nylon
20A	Adjustment stem	AISI 304 / 1.4301
20B	Washer	Stainless steel
20C	Nut	Stainless steel A2-70
21	* Spring identification plate	Plastic; Aluminium
22	Retaining washer	AISI 302 / 1.4300
23	Bearing	Steel
24	Pin	AISI 304 / 1.4301
25	Cover nut	AISI 303 / 1.4305
25A	* Gasket	PTFE
25B	* O-ring	EPDM
26	Retaining ring	Stainless steel A2-70
30	Adjustment screw	Stainless steel A2-70
31	Nut	Stainless steel A2-70
32	Top cap	AISI 303 / 1.4305
40	Gasket	Copper
41	Gauge adaptor	AISI 316 / 1.4401

* Available spare parts.

We reserve the right to change the design and material of this product without notice.

LRQA CERTIFIED ISO 9001

ADCA

CAPACITY TABLE

INLET (bar)	OUTLET (bar)	SATURATED STEAM (kg/h)			COMPRESSED AIR (Nm^3/h – 0 ºC – 1,013 bar)		
		DN 15	DN 20	DN 25	DN 15	DN 20	DN 25
2	0,2 – 1	75	110	132	120	126	147
	1,8	68	102	125	109	112	135
3	0,3 – 1,5	104	148	177	157	169	195
	2	97	141	170	150	162	187
	2,6	90	134	162	142	153	178
4	0,4 – 2	125	180	210	196	203	243
	2,5	118	171	201	188	196	235
	3,6	107	158	190	170	181	219
5	0,5 – 2,5	137	192	230	208	222	253
	3	134	189	222	202	211	242
	4,5	128	183	213	197	203	235
6	0,6 – 3	166	221	266	240	251	298
	4	154	212	256	232	244	286
	5,5	138	200	242	225	230	266
7	0,7 – 3,5	175	250	300	269	282	337
	4,5	168	242	290	260	270	321
	5,5	157	228	270	245	255	300
	6,3	148	216	253	233	244	284
8	0,8 – 4	222	300	357	323	339	396
	5	208	290	350	315	330	383
	6	189	271	330	290	306	361
	7,2	170	240	286	258	270	318
9	0,9 – 4,5	230	321	382	347	363	424
	6	209	300	363	322	340	400
	7	192	271	324	293	309	364
	8	172	241	285	264	279	328
10	1 – 5	238	341	408	372	388	453
	6	230	330	397	354	375	438
	7	215	307	363	328	348	410
	8,6	177	260	312	280	296	348
11	1,1 – 5,5	250	358	427	387	404	474
	6	244	348	415	375	394	463
	7	237	337	402	362	383	451
	8,6	206	296	356	319	338	398
12	1,2 – 6	265	375	449	404	423	500
	7	260	370	444	398	418	492
	8	246	350	421	375	400	469
	8,6	236	333	400	358	380	448
13	1,3 – 6,5	281	398	476	428	447	530
	7	279	391	470	420	440	522
	8	266	381	459	411	431	510
	8,6	257	367	440	395	416	494
15	1,5 – 7,5	300	424	508	455	477	565
	8,6	285	408	488	439	463	546
17	1,7 – 8,6	321	453	543	486	510	604

D.P (bar)	WATER (m^3/h)		
	DN 15	DN 20	DN 25
1,5	2,10	3,21	3,83
2	2,43	3,70	4,42
3	2,95	4,54	5,41
4	3,43	5,24	6,25
5	3,78	5,78	6,90
6	4,16	6,25	7,45
7	4,37	6,68	7,96
8	4,63	7,08	8,45
9	4,88	7,47	8,90
10	5,12	7,83	9,34
12	5,56	8,51	10,15

We reserve the right to change the design and material of this product without notice.

LRQA CERTIFIED ISO 9001

ADCA

ORDERING CODES PRV25

VALVE MODEL	PRV25	2	S	2	M	P	0	X	0	A	15	
PRV25 – Bellows sensing pressure reducing valve	PRV25											
PRW25 – Bellows sensing, balanced plug pressure reducing valve	PRW25											
VALVE SERIES												
Series 2		2										
BODY MATERIAL												
Carbon steel			S									
Stainless steel			I									
REGULATING RANGE												
Blue spring 0,35 to 1,7 bar (only available for PRW25 model)				2								
Yellow spring 0,14 to 1,7 bar (0,14 to 1,2 bar for spring and dome-loading variant; only available for PR25 model)				3								
Green spring 1,4 to 4 bar (1 to 3,5 bar for spring and dome-loading variant)				4								
Red spring 3,5 to 8,6 bar				5								
VALVE SEALING												
Metal to metal					M							
Soft sealed with PTFE/GR					G							
Soft sealed with NBR (mandatory for PRW25 model; not available in PRV25 model)					N							
ADJUSTMENT KNOB, SPRING AND DOME-LOADING AND TOP CAP												
Nylon adjustment knob (standard)						P						
Rising adjustment knob with lock nut						K						
Top cap						T						
Spring and dome-loading top						D						
GAUGE PORT OPTIONS												
Without gauge ports							0					
Threaded gauge connection on the left side (relative to flow direction) – downstream pressure – ISO 228 G 1/4"							4					
Threaded gauge connection on the right side (relative to flow direction) – downstream pressure – ISO 228 G 1/4"							3					
Threaded gauge connections on both sides – downstream pressure – ISO 228 G 1/4"							2					
Threaded gauge connection on the left side (relative to flow direction) – downstream pressure – 1/4" NPT							W					
Threaded gauge connection on the right side (relative to flow direction) – downstream pressure – 1/4" NPT							Y					
Threaded gauge connections on both sides – downstream pressure – 1/4" NPT							Z					
SPECIAL FEATURES												
None								X				
SENSING LINE CONNECTION												
Internal sensing line (standard)									0			
External sensing line connection – ISO 228 G 1/4"									1			
External sensing line connection – 1/4" NPT									2			
PIPE CONNECTIONS												
Female threaded ISO 7 Rp										A		
Female threaded NPT ASME B1.20.1										C		
Flanged EN 1092-1 PN 25										M		
Flanged ASME B16.5 Class 150										U		
Flanged ASME B16.5 Class 300										V		
SIZE												
1/2" or DN 15											15	
3/4" or DN 20											20	
1" or DN 25											25	
SPECIAL CONSTRUCTION / ADDITIONAL OPTIONS												
Full description or additional codes have to be added in case of non-standard combination												E