LRQA CERTIFIED ISO 9001

ADCA

ADCAMat

PRESSURE OPERATED PUMPS
POP
(4" x 4" – DN 100 x DN 100)

DESCRIPTION

The ADCAMat POP pressure operated pump is recommended in the transfer of steam condensate, oils and other non-hazardous liquids compatible with the construction, to a higher elevation or pressure. Under certain conditions, it can drain a closed vessel under vacuum or pressure. The pump can be operated using steam, compressed air or other gases, and is manufactured in carbon steel.

OPERATION

Liquid flows by gravity into the pump through an inlet check valve, lifting the float. At this point, the motive fluid intake valve is closed while the vent valve is open. As the float reaches its highest position the motive fluid intake valve opens and the vent valve closes, allowing the motive fluid to enter the pump body. The pressure in the pump builds up just enough to overcome backpressure.
The pressurized liquid opens the outlet check valve and the discharge starts. The liquid discharged may be quantified through a special counter, enabling the pump to function as a reliable flow meter.
When the float reaches its lower position the motive fluid intake valve closes and the vent valve opens allowing the liquid to fill the pump once again, repeating the cycle.

MAIN FEATURES

Hardened stainless steel wear parts.
High-endurance inconel springs.
Low filling head to minimize installation space.
No electric requirements or NPSH issues.
Suitable for hazardous environments.
Low running costs.

OPTIONS: Level gauge.
Stroke counters.

USE: To lift steam condensate and other liquids compatible with the construction.

AVAILABLE MODELS: POPS – carbon steel.

SIZES: 4" x 4"; DN 100 x DN 100.

CONNECTIONS: Flanged EN 1092-1 PN 16.
Flanged ASME B16.5 Class 150.
Female threaded ISO 7 Rp (threaded flanges).
Others on request.

INSTALLATION: Horizontal installation. An example is shown in Fig. 1.
See IMI – Installation and maintenance instructions.

MOTIVE MEDIUM: Saturated steam, compressed air, nitrogen and other gases.

CE MARKING – GROUP 2 (PED – EUROPEAN DIRECTIVE)	
PN 16	**CATEGORY**
All sizes	4 (CE marked)

BODY LIMITING CONDITIONS *		
PN 16	**CLASS 150**	**RELATED TEMPERATURE**
ALLOWABLE PRESSURE	**ALLOWABLE PRESSURE**	
16 bar	16 bar	50 ºC
14 bar	–	100 ºC
13 bar	13 bar	195 ºC
12 bar	–	250 ºC

* Rating according to EN 1092-1:2018.

LIMITING CONDITIONS	
Liquid specific gravity	0,8 to 1
Maximum viscosity	5º Engler
Maximum motive inlet pressure	10 bar
Minimum motive inlet pressure	1 bar
Maximum operating temperature	185 ºC
Minimum operating temperature *	20 ºC
Pump discharge per cycle	325 L

* Lower limits on request.

We reserve the right to change the design and material of this product without notice.

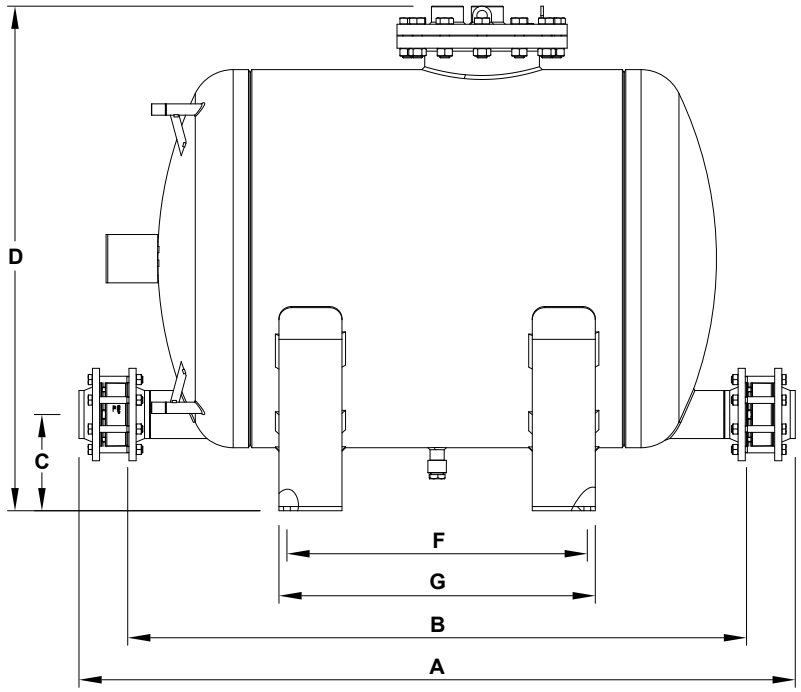

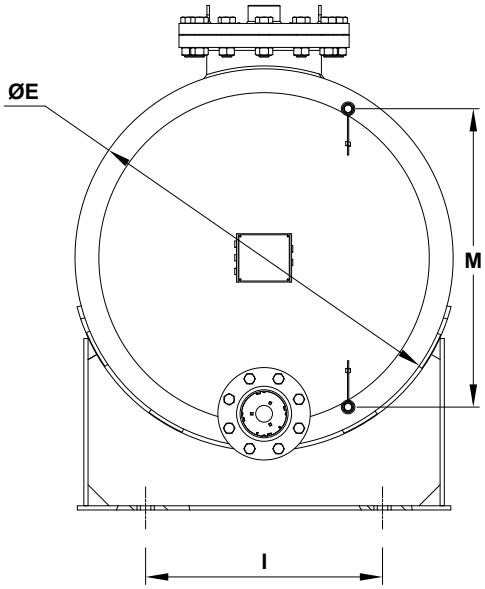

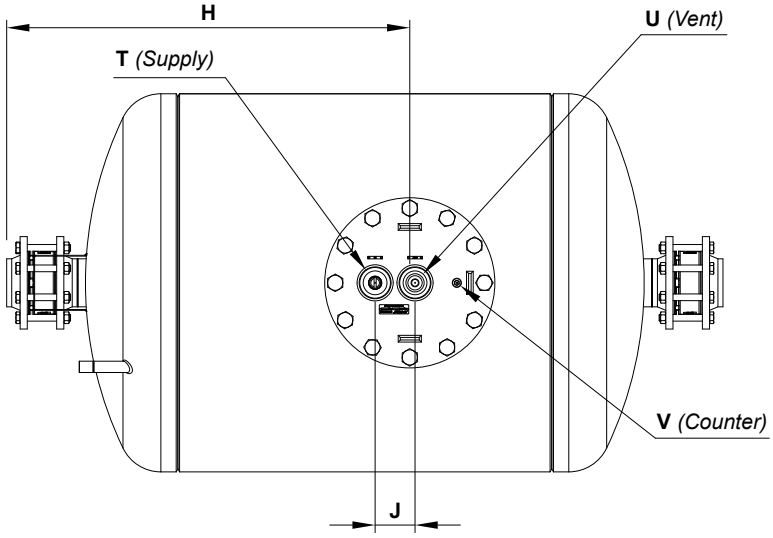

DIMENSIONS (mm)																
SIZE	A *	B *	C	D	ØE	F	G	H	I	J	M	T **	U **	V **	VOL. (L)	WGT. (kg)
4" x 4" DN 100 x 100	1705	1473	229	1200	900	715	753	960	564	95	710	2"	2"	1/2"	1028	565

* With EN 1092-1 welding neck flanges. Dimensions may differ if ASME B16.5 flanges or ISO 7 Rp female threaded flanges are requested. Consult the manufacturer.

** As standard, in versions manufactured with EN 1092-1 PN 16 flanges, these connections are female threaded ISO 7 Rp. In versions with ASME B16.5 flanges, these connections are female threaded NPT.

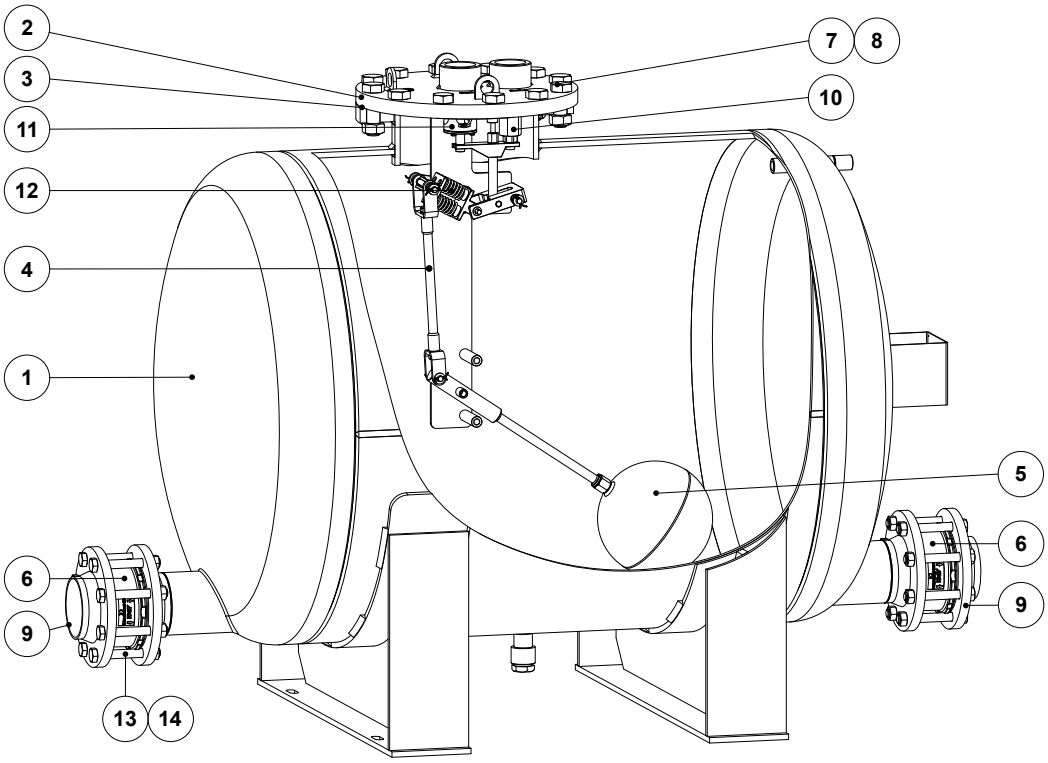

MATERIALS		
POS. No.	**DESIGNATION**	**MATERIAL**
1	Pump body	P265GH / 1.0425; P235GH / 1.0345; S235JR / 1.0038; P250GH / 1.0460
2	Cover	P250GH / 1.0345 ; A105 / 1.0432
3	* Cover gasket	Stainless steel / Graphite
4	Lever assembly	Stainless steel
5	* Float	Stainless steel
6	* Check valve	A351 CF8M / 1.4408
7	Bolt	Steel 8.8
8	Nut	Steel 8.8
9	Counter flange	P250GH / 1.0460
10	* Intake valve/seat assembly	Stainless steel
11	* Exhaust valve/seat assembly	Stainless steel
12	* Spring assembly	Inconel
13	Bolt	Zinc plated steel
14	Nut	Zinc plated steel

* Available spare parts.

We reserve the right to change the design and material of this product without notice.

SIZING

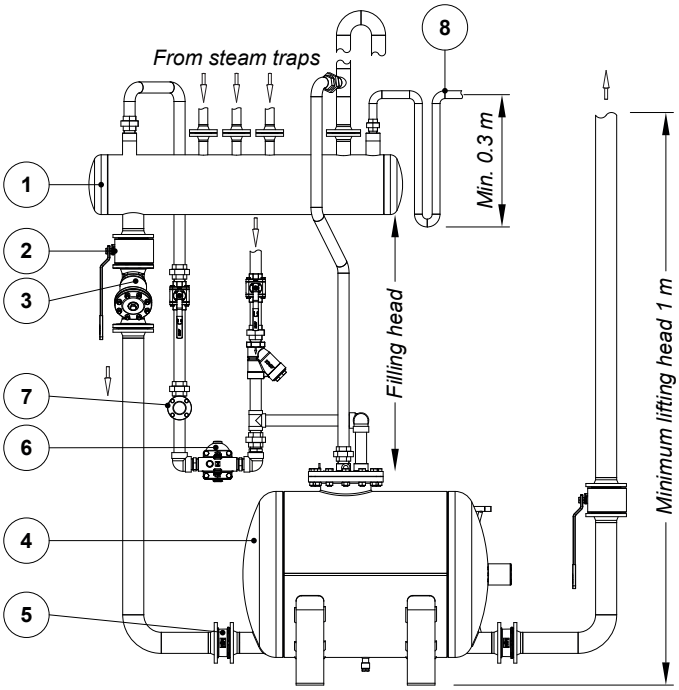

Fig. 1

To accurately size a pressure operated pump, the following information must be provided:

1. The condensate load (kg/h).

2. The operating medium (steam, compressed air or other gases) and its pressure.

3. The total lift or backpressure in bar the pump will have to overcome. This includes the change in fluid level elevation after the pump (0.0981 bar/m of lift), plus pressure in the return piping, plus the pressure drop caused by pipe friction and other system components.

4. Available filling head (see Fig. 1) in mm or any other dimension that allows its determination.

EQUIPMENT			
POS. No.	**DESIGNATION**	**POS. No.**	**DESIGNATION**
1	Receiver	**5**	Check valve
2	Shut-off valve	**6**	Steam trap
3	Y strainer	**7**	Sight glass
4	Pump	**8**	Overflow

Table 1

CAPACITY CORRECTION FACTOR FOR GASES OTHER THAN STEAM					
% BACKPRESSURE VS MOTIVE PRESSURE (BP/MP)	**10%**	**30%**	**50%**	**70%**	**90%**
Correction factor	1,04	1,08	1,12	1,18	1,28

Table 2

CAPACITY CORRECTION FACTORS FOR FILLING HEADS OTHER THAN 600 mm				
PUMP SIZE	**FILLING HEAD (mm)**			
	150	**300**	**600**	**900**
4" x 4" – DN 100 x 100	0,7	0,8	1	1,08

RECEIVER

A receiver is recommended to temporarily hold the liquid and prevent any flooding of the equipment, while the pump is performing a pumping cycle. A definable length of large diameter pipe can be used.
Suggested receiver sizes are shown in Table 3.

Table 3

RECEIVER			
PUMP SIZE	**4" x 4" – DN 100 x 100**		
Pipe Ø x length (mm)	406 x 2000	640 x 1500	800 x 1500

We reserve the right to change the design and material of this product without notice.

Table 4

FLOW RATE (kg/h) INSTALLATION WITH 600 mm FILLING HEAD ABOVE THE PUMP COVER		
MOTIVE PRESSURE (bar)	**TOTAL LIFT (bar)**	**4" x 4" – DN 100 x 100**
1	0,35	13130
1,7		16850
3,5		21900
5		24830
7		26880
10		29800
1,7	1	16630
3,5		20400
5		23050
7		25100
10		29800
2,5	1,5	13210
3,5		15150
5		17280
7		19100
10		21410
3,5	3	11860
4		12300
5		12900
7		13740
10		14980
4,5	4	11700
5		11840
7		12710
10		13760

Remark: Based on liquid specific gravity of 0,9 to 1,0.

Example

Condensate load	8500 kg/h
Filling head	150 mm
Motive fluid	Compressed air
Available pressure	7 bar
Vertical lift after pump	10 m
Return piping pressure	1,2 bar
Piping friction pressure drop	Negligible

Calculations:
Total backpressure: 1,2 bar + (10 m x 0,0981) = 2,181 bar.
Assuming steam as motive medium at a pressure of 7 bar and a total backpressure of 3 bar, then according to Table 4 a DN 100 x 100 pump, with a capacity of 13740 kg/h, is the recommended size.

Filling head correction:
With 150 mm filling head the correction factor from Table 2 is 0,7. The corrected capacity is thus 13740 kg/h x 0,7 = 9618 kg/h.

Correction for air as a motive medium:
The % backpressure is 2,181 bar / 7 bar = 31%. The correction factor from Table 1, is 1,08.
The corrected capacity is thus 9618 kg/h x 1,08 = 10387,44 kg/h, and so, a DN 100 x 100 pump is still the recommended size.

We reserve the right to change the design and material of this product without notice.