PACKAGED AUTOMATIC PUMP TRAPS
PPT-K (Simplex)

DESCRIPTION

The ADCAMat PPT-K packaged pump trap unit is intended for lifting hot condensate in closed loop systems.
The unit is comprised by an ADCAMat PPT14 pump trap, a receiver and all auxiliary items, compactly mounted on a metal frame, piped and ready for connection, saving time, work and site costs. In addition, it ensures that the installation of the pump trap is correct in every detail. Two or more units can be connected in parallel to cope with flow rates beyond the capacity of a single unit.

MAIN FEATURES

Fully assembled and tested, saving design, assembly and commissioning time.
Compactly mounted in a structural steel metal frame to save floor space.

OPTIONS: Alternative configurations and designs.

AVAILABLE MODELS: PPTS-K – carbon steel.
PPTSS-K – stainless steel.

CONNECTIONS: Flanged EN 1092-1 PN 16.
Flanged ASME B16.5 Class 150.
Female threaded ISO 7 Rp or NPT (threaded flanges).
Others on request.

INSTALLATION: See IMI – Installation and maintenance instructions.

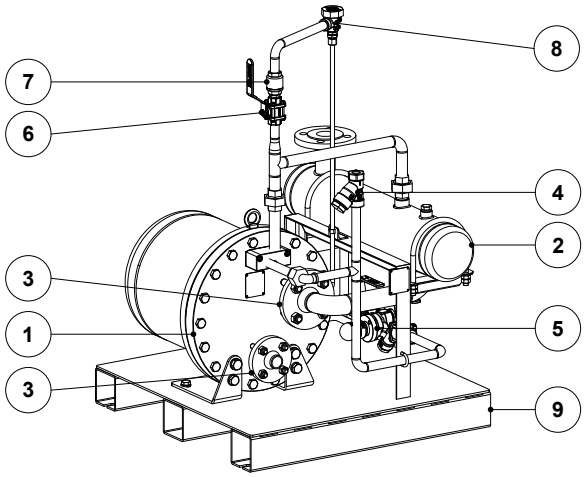

CE MARKING – GROUP 2 (PED – EUROPEAN DIRECTIVE)	
PN 16	**CATEGORY**
All sizes	2 (CE marked)

LIMITING CONDITIONS	
Maximum operating pressure	10 bar
Maximum operating temperature	185 ºC
Minimum operating temperature	0 ºC
Pump trap	See IS PPT14.040

MATERIALS

POS. No.	DESIGNATION	POS. No.	DESIGNATION
1	PPT14 pump trap	6	M3i5 ball valve
2	Receiver	7	RT25 check valve
3	RD40 check valve	8	TH13A thermostatic steam trap and air vent
4	IS140 Y strainer	9	Metal frame
5	CTS4U trapping station + UTS22 thermostatic steam trap		

We reserve the right to change the design and material of this product without notice.

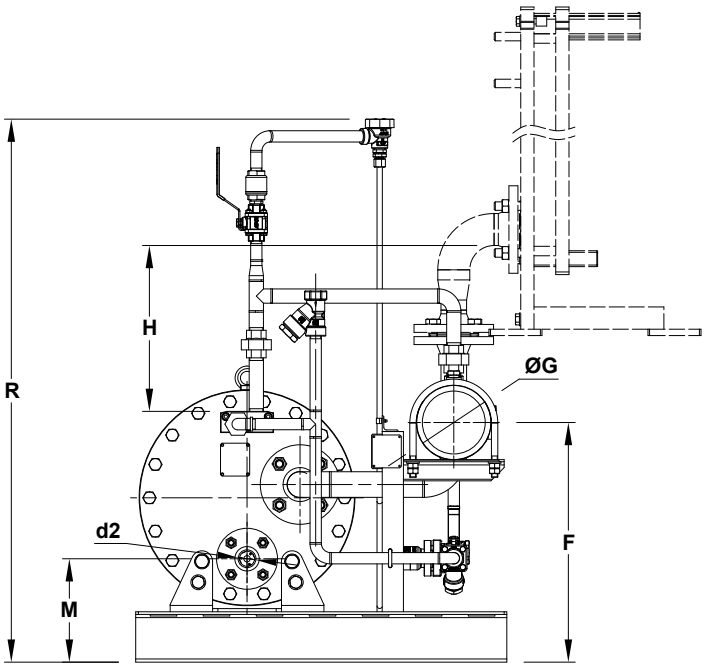

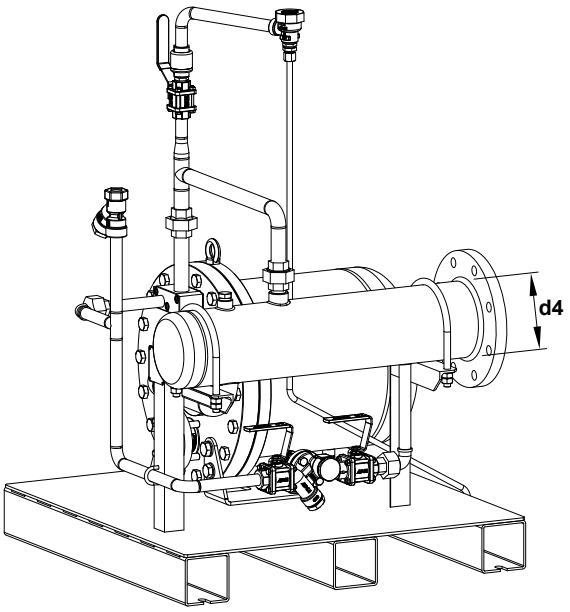

Optional horizontal manifold inlet

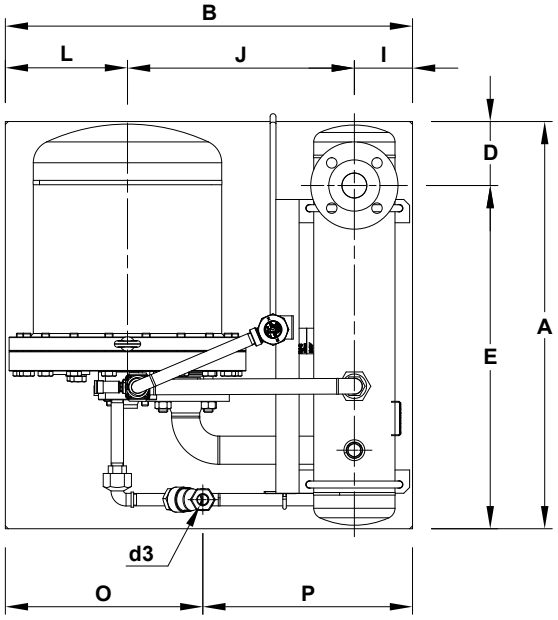

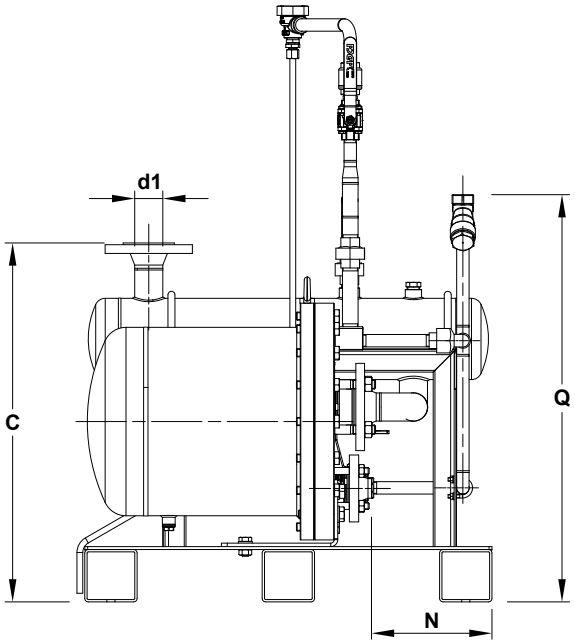

DIMENSIONS (mm) *																	
SIZE	**A**	**B**	**C**	**D**	**E**	**F**	**ØG**	**H ****	**I**	**J**	**L**	**M**	**N**	**O**	**P**	**Q**	**R**
DN 40 x 25	700	700	617	110	590	452	139,7	300	100	390	210	195	207,1	339,5	360,5	700	1024,2
DN 50 x 40	740	710	664	166	574	484	168,3	300	110	390	210	195	232,1	339,5	370,5	700	1024,7

* Dimensions are subject to change without notice. Consult the manufacturer for certified dimensions and weight.
** H = 300 mm, otherwise a capacity correction factor must be applied (see IS PPT14.040).

CONNECTION SIZES				
SIZE	**d1 ***	**d2 ****	**d3 ***	**d4 *****
DN 40 x 25	DN 40	DN 25	Rp 1/2"	DN 125
DN 50 x 40	DN 50	DN 40	Rp 1/2"	DN 150

d1 – inlet; d2 – outlet; d3 – motive steam; d4 – optional flanged inlet connection (replaces d1).
* Threaded d1 or flanged d3; ** Welding neck flange. Threaded connections on request.
*** Can be supplied with welded reduction and either flanged or threaded connection.

We reserve the right to change the design and material of this product without notice.