LRQA CERTIFIED ISO 9001

ADCA

ADCAMat

AUTOMATIC PUMP TRAPS
PPT14

DESCRIPTION

The ADCAMat PPT14 automatic pump trap is specially recommended where stall condition may occur due to poor steam trap condensate discharge capacity, caused by temporary insufficient pressure drop.
The equipment combines the features of a float steam trap and a pressure operated pump, in one single unit.
Whenever the steam trap function is incapable of draining condensate, the pump function is activated (using external steam pressure). The pump replaces the necessary positive pressure to lift the condensate to the return system, before water logging occurs, avoiding water hammer and consequent noise, equipment damage, corrosion, unstable temperature control, etc.

MAIN FEATURES

Compact design.
Hardened stainless steel wear parts.
High-endurance inconel springs.
Low filling head to minimize installation space.
No electric requirements or NPSH issues.
Suitable for hazardous environments.
Low running costs.
No motive or flash steam is lost.
Operation under vacuum conditions.

OPTIONS: Level gauge.

USE: Drain and lift steam condensate from heat exchangers, among others.

AVAILABLE MODELS: PPT14S – carbon steel.
PPT14SS – stainless steel.

SIZES: 11/2" x 1" and 2" x 11/2";
DN 40 x DN 25 and DN 50 x DN 40.

CONNECTIONS: Flanged EN 1092-1 PN 16.
Flanged ASME B16.5 Class 150.
Female threaded ISO 7 Rp (threaded flanges).
Others on request.

INSTALLATION: Horizontal installation in a closed loop system. An example is shown in Fig. 1.
See IMI – Installation and maintenance instructions.

MOTIVE MEDIUM: Saturated steam.

CE MARKING – GROUP 2 (PED – EUROPEAN DIRECTIVE)	
PN 16	**CATEGORY**
All sizes	2 (CE marked)

We reserve the right to change the design and material of this product without notice.

LRQA CERTIFIED ISO 9001

ADCA

LIMITING CONDITIONS	
Liquid specific gravity	0,8 to 1
Maximum motive inlet pressure	10 bar
Minimum motive inlet pressure	1 bar
Maximum operating temperature	185 ºC
Minimum operating temperature	0 ºC
Pump discharge per cycle (approx.)	11 L

Remark: It is recommended that the motive inlet pressure does not exceed 1 to 4 bar above the expected pump backpressure.

FLOW RATE CAPACITY (kg/h)
OPERATING IN PUMP MODE W/ 300 mm FILLING HEAD

MOTIVE PRESSURE (bar)	TOTAL LIFT (bar)	11/2" x 1" DN 40 x 25	2" x 11/2" DN 50 x 40
1	0,35	1050	1220
2		1190	1490
3		1220	1530
4		1280	1600
6		1310	1640
8		1380	1730
10		1460	1830
2	1	940	1180
3		1020	1280
4		1110	1390
6		1200	1510
8		1290	1620
10		1380	1730
3	2	720	900
4		850	1070
5		940	1180
6		1010	1260
8		1130	1410
10		1200	1490
4	3	620	780
5		730	920
6		840	1050
8		980	1230
10		1090	1370
5	4	540	680
6		690	870
8		880	1100
10		960	1190
6	5	520	650
8		730	910
10		840	1060
7	6	530	670
8		640	810
10		730	920

BODY LIMITING CONDITIONS *

PPT14S		PPT14SS		
FLANGED PN 16 / CLASS 150		FLANGED PN 16	FLANGED CLASS 150	RELATED TEMP.
ALLOWABLE PRESSURE	RELATED TEMP.	ALLOWABLE PRESSURE	ALLOWABLE PRESSURE	
16 bar	50 ºC	16 bar	15,3 bar	50 ºC
14 bar	100 ºC	15 bar	13,3 bar	100 ºC
13 bar	195 ºC	12,7 bar	11,1 bar	200 ºC
12 bar	250 ºC	12 bar	10,2 bar	250 ºC

* Rating according to EN 1092-1:2018.

RECEIVER SIZING TABLE
FOR EQUALIZED, CLOSED SYSTEM INSTALLATION

FLOW RATE (kg/h)	RECEIVER SIZE (DN)						
	40	50	80	100	150	200	250
	RECEIVER LENGTH (mm)						
≤ 300	1200	700	–	–	–	–	–
400	1500	1000	–	–	–	–	–
500	2000	1200	500	–	–	–	–
600	–	1500	600	–	–	–	–
800	–	2000	800	500	–	–	–
1000	–	–	1000	700	–	–	–
1500	–	–	1500	1000	–	–	–
2000	–	–	2000	1300	600	–	–
3000	–	–	–	2000	900	500	–
4000	–	–	–	–	1200	700	–
5000	–	–	–	–	1400	800	500
6000	–	–	–	–	1700	1000	600
7000	–	–	–	–	2000	1200	700
8000	–	–	–	–	–	1300	800
9000	–	–	–	–	–	1500	900
10000	–	–	–	–	–	1700	1000

Remark: Receiver length can be reduced by 50% when the motive inlet pressure divided by the backpressure is ≥ 2.

CAPACITY CORRECTION FACTORS FOR FILLING HEADS
OTHER THAN 300 mm

PUMP SIZE	FILLING HEAD "H" (mm)			
	150	300	600	900
All sizes	0,7	1	1,2	1,35

Remark: Filling head "H" is shown in Fig. 1.

FLOW RATE CAPACITY (kg/h) OPERATING IN STEAM TRAP MODE

MODEL	SIZE	DIFFERENTIAL PRESSURE (bar)											
		0,1	0,3	0,5	0,7	1	1,5	2	3	4	5	7	10
PPT14	**11/2" x 1" – DN 40 x 25**	650	1100	1500	1700	2000	2600	3000	3510	3990	4400	5400	6200
PPT14	**2" x 11/2" – DN 50 x 40**	1050	1750	2400	2700	3400	3900	4500	5900	6600	7650	8500	10100

We reserve the right to change the design and material of this product without notice.

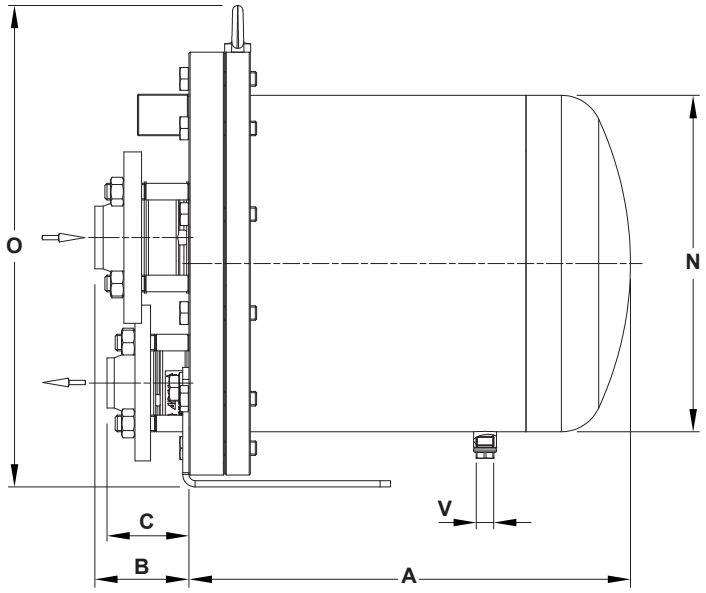

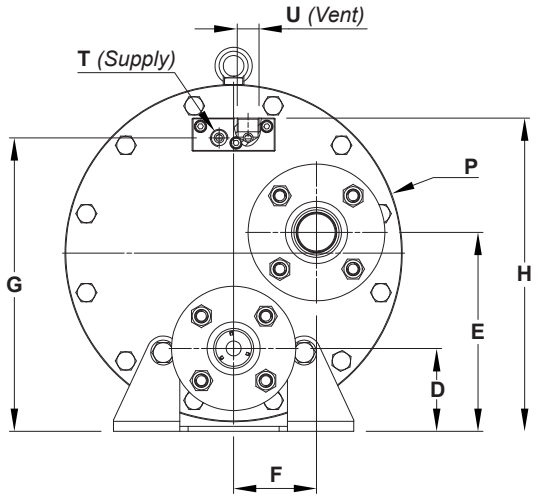

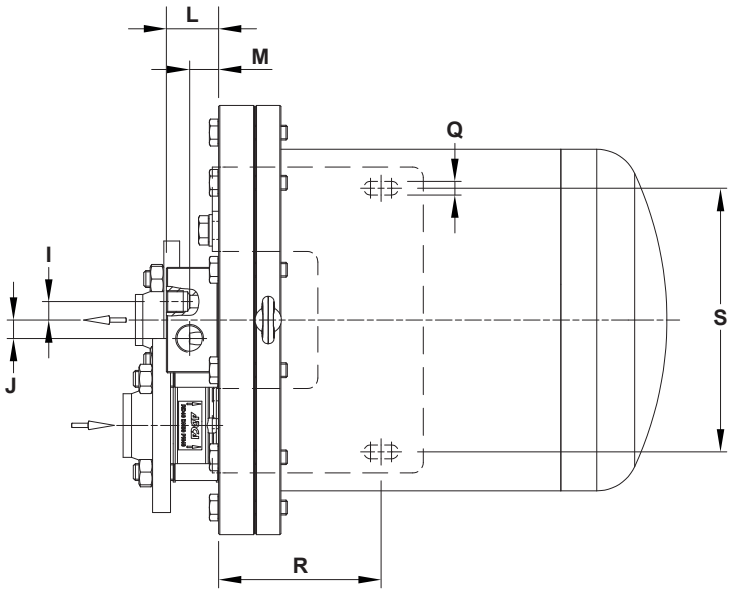

DIMENSIONS – PN 16 (mm)																							
SIZE	**A**	**B ***	**C ***	**D**	**E**	**F**	**G**	**H**	**I**	**J**	**L**	**M**	**N**	**O**	**P**	**Q**	**R**	**S**	**T ****	**U ****	**V ****	**VOL. (L)**	**WGT. (kg)**
DN 40 x 25	425	80	64	100	240	100	354	378	17,5	17,5	50	28	324	464	407	13	154	250	1/2"	3/4"	3/8"	25	81,2
DN 50 x 40	425	91	79	100	240	100	354	378	17,5	17,5	50	28	324	464	407	13	154	250	1/2"	3/4"	3/8"	25	84

* Dimensions are different if ISO 7 Rp female threaded flanges are requested.
** As standard, in versions manufactured with EN 1092-1 PN 16 flanges, these connections are female threaded ISO 7 Rp. In versions with ASME B16.5 flanges, these connections are female threaded NPT.

DIMENSIONS – CLASS 150 (mm)																							
SIZE	**A**	**B ***	**C ***	**D**	**E**	**F**	**G**	**H**	**I**	**J**	**L**	**M**	**N**	**O**	**P**	**Q**	**R**	**S**	**T ****	**U ****	**V ****	**VOL. (L)**	**WGT. (kg)**
11/2" x 1"	425	97	80	100	240	100	354	378	17,5	17,5	50	28	324	464	407	13	154	250	1/2"	3/4"	3/8"	25	80,6
2" x 11/2"	425	106	96	100	240	100	354	378	17,5	17,5	50	28	324	464	407	13	154	250	1/2"	3/4"	3/8"	25	83,3

* Dimensions are different if ISO 7 Rp female threaded flanges are requested.
** As standard, in versions manufactured with EN 1092-1 PN 16 flanges, these connections are female threaded ISO 7 Rp. In versions with ASME B16.5 flanges, these connections are female threaded NPT.

We reserve the right to change the design and material of this product without notice.

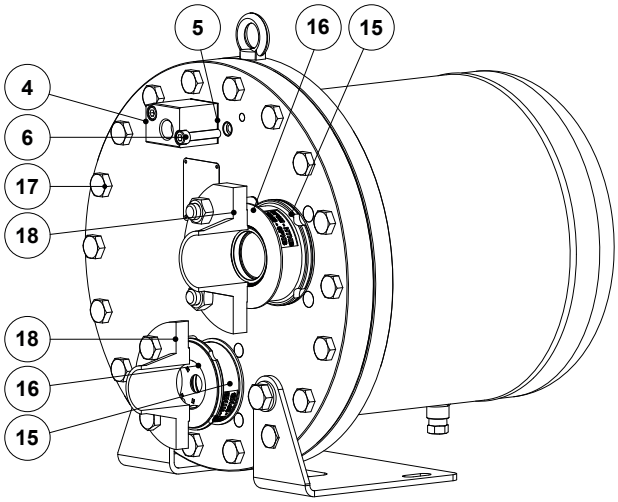

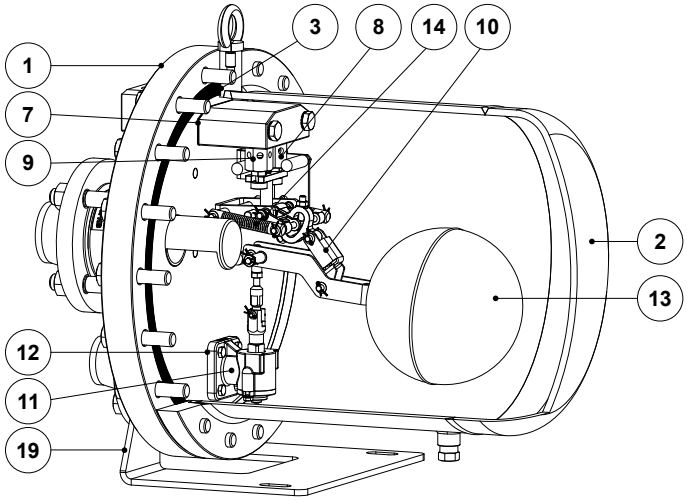

MATERIALS			
POS. No.	**DESIGNATION**	**PPT14S**	**PPT14SS**
1	Body	S355JR / 1.0045	AISI 316 / 1.4401; AISI 316L / 1.4404
2	Cover	S355JR / 1.0045; P265GH / 1.0425; P235GH / 1.0345	AISI 304 / 1.4301; AISI 316 / 1.4401
3	* Cover gasket	Stainless steel / Graphite	Stainless steel / Graphite
4	Connection block	S355JR / 1.0045	Stainless steel
5	* Gasket	Stainless steel / Graphite	Stainless steel / Graphite
6	Bolt	Steel 8.8	Stainless steel A2-70
7	* Gasket	Stainless steel / Graphite	Stainless steel / Graphite
8	* Intake valve/seat assembly	Stainless steel	Stainless steel
9	* Exhaust valve/seat assembly	Stainless steel	Stainless steel
10	Pump mechanism	Stainless steel	Stainless steel
11	Steam trap mechanism	Stainless steel	Stainless steel
12	* Gasket	Stainless steel / Graphite	Stainless steel / Graphite
13	* Float	Stainless steel	Stainless steel
14	* Spring assembly (2 pcs.)	Inconel	Inconel
15	* Check valve	A351 CF8M / 1.4408	A351 CF8M / 1.4408
16	* Gasket	Stainless steel / Graphite	Stainless steel / Graphite
17	Bolt	Steel 8.8	Stainless steel A2-70
18	Counter flange	P250GH / 1.0460	AISI 316 / 1.4401
19	Supporting frame	S235JR / 1.0038	AISI 304 / 1.4301

* Available spare parts.

We reserve the right to change the design and material of this product without notice.

SIZING

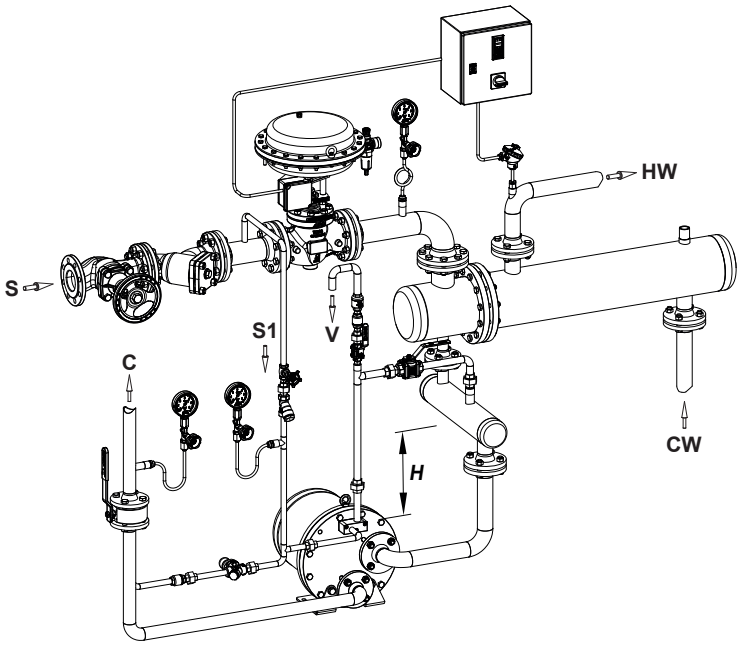

H – Filling head
S – Process steam supply
S1 – Motive steam
C – Condensate return
V – Automatic air venting
CW – Cold water inlet
HW – Hot water outlet

Fig. 1

To accurately size a pump trap, the following information must be provided:

1. Heat exchanger (or process equipment) maximum steam or condensate load, in kg/h.

2. Heat exchanger (or process equipment) operating pressure at full load in bar or, alternatively, the heat exchanger maximum operating pressure in bar and the over design percentage.

3. Motive steam pressure available to operate the pump trap, in bar.

4. The total lift or backpressure in bar the pump will have to overcome. This includes the change in fluid level elevation after the pump (0,0981 bar/m of lift), plus pressure in the return piping, plus the pressure drop caused by pipe friction and other system components.

5. Maximum controlled temperature of the medium to be heated (secondary fluid outlet temperature), in ºC.

6. Minimum temperature of the medium to be heated (secondary fluid minimum inlet temperature), in ºC.

7. Available filling head (H) in mm or any other dimension that allows its determination. See Fig. 1.

For information on how to predict stall refer to TIS.STALL Technical Information Sheet – Understanding stall condition – or consult the manufacturer.

RECEIVER

A receiver is recommended to temporarily hold the liquid and prevent any flooding of the equipment, while the pump is performing a pumping cycle. A definable length of large diameter pipe can be used. See receiver sizing table.

NOTE: All ADCAMat automatic pump traps feature two mechanisms, combining the characteristics of a float steam trap and a pressure operated pump.
When certain that the system backpressure is always superior to the equipment upstream pressure then an ADCAMat pressure operated pump (without steam trap) is the ideal solution as long as it is installed in a closed loop.
In extreme cases, where the system condensate load is above the discharge capacity of all ADCAMat automatic pump trap models, it is recommended to install an ADCAMat pressure operated pump in combination with a high capacity FLT series steam trap. In such scenarios, please consult the manufacturer.

We reserve the right to change the design and material of this product without notice.

OPERATION

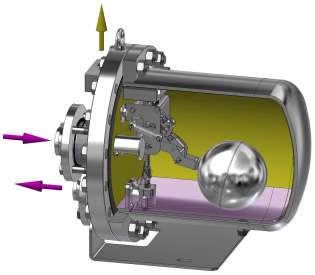

1. In the first instance, the steam intake valve is closed, while the vent valve is open. As condensate flows into the body through the inlet check valve, the PPT14 can operate in a closed loop application, in one of two ways (as a steam trap or pressure operated pump).

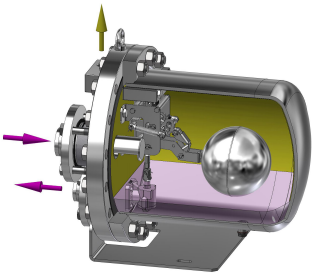

2. If the inlet pressure is greater than the backpressure, the PPT14 works as a steam trap, continuously discharging condensate by differential pressure. At this point the steam intake valve remains closed and the vent valve open.

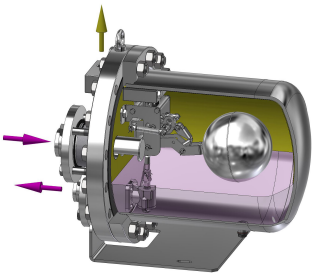

3. As soon as, e.g., the equipment control valve starts to modulate, the steam pressure will decrease. The lower differential pressure decreases the PPT14's ability to discharge as a steam trap causing the condensate level to rise inside the body. Vacuum may even occur at this stage.

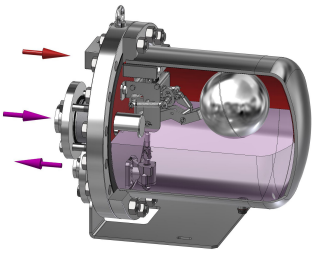

4. If this situation would persist, the condensate would eventually flood the equipment, causing problems. However, by using a PPT14, as the float reaches its highest position, the snap action mechanism actuates, closing the vent valve and opening the steam intake valve. Steam will then replace the necessary positive pressure to pump out the condensate. At this point the PPT14 works as a pressure operated pump.

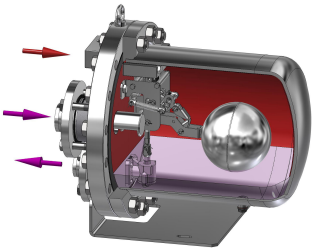

5. The float starts to fall as the condensate level inside the body drops and is discharged to the return system. When the float reaches its lowest position, the snap action mechanism resets.

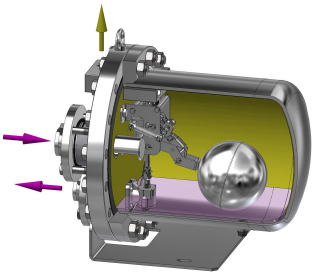

6. As the motive steam valve closes and the vent valve opens, equalizing the body pressure with the upstream pressure, the condensate is allowed to flow once again into the PPT14. The cycle then repeats itself and, with enough differential pressure, the PPT14 resumes as a steam trap or, otherwise, as a pump.

We reserve the right to change the design and material of this product without notice.