MAGNETIC LEVEL INDICATORS
MLI

DESCRIPTION

The ADCA MLI magnetic level indicator is a robust solution for continuous measurement, display, and monitoring of liquid levels in industrial tanks and vessels. Operating on the principle of communicating tubes, the ADCA MLI features a bypass chamber mounted to the side of the vessel, ensuring that the liquid level inside the chamber mirrors that of the main tank.
A float containing high-strength permanent magnets travels within the bypass tube, magnetically actuating an external visual indicator without direct contact. This non-invasive design ensures reliable performance even in demanding environments.
Easily integrates with optional accessories such as reed switches and reed chains for enhanced control and automation.

MAIN FEATURES

Stainless steel construction.
Measuring range up to 4 meters.
Measuring accuracy ±5 mm.
Minimal leak points as compared to sight glasses.
No process media in contact with the indicator glass.
Continuous measurement of levels, independent of physical and chemical changes of the media: flashing, foaming, bubble formation, etc.

OPTIONS: Magnetic bistable reed switches for point-level detection.
Reed chain transmitters.
Floats designed for varying liquid densities, including low specific gravity applications.
Special designs on request.

AVAILABLE MODELS: MLI16.

CONNECTIONS: Flanged EN 1092-1 PN 40.
Flanged ASME B16.5 Class 150 or 300.
Male threaded ISO 7 R.
Male threaded NPT ASME B1.20.1.
Others on request.

INSTALLATION: Always with the bottom cover pointing downwards.

CE MARKING – GROUP 2 (PED – EUROPEAN DIRECTIVE)		
PN 40	**CENTER-TO-CENTER**	**CATEGORY**
1/2" to 1" DN 15 to 25	L < 170 mm	SEP
	170 ≤ L < 1650 mm	1 (CE marked)
	L ≥ 1650 mm	2 (CE marked)

BODY LIMITING CONDITIONS *		
FLANGED / PN 40 CLASS 300 ** ALLOWABLE PRESSURE	**FLANGED CLASS 150 *** ALLOWABLE PRESSURE**	**RELATED TEMPERATURE**
40 bar	15,3 bar	50 ºC
37,9 bar	13,3 bar	100 ºC
31,8 bar	11,1 bar	200 ºC
27,6 bar	9,7 bar	300 ºC
26,4 bar	8,4 bar	350 ºC

* Other limits on request.
PMO – Maximum operating pressure: 40 bar (see "Ordering Codes" table for restrictions).
TMO – Maximum operating temperature: 350 ºC (see "Ordering Codes" table for restrictions).
** According to EN 1092-1:2018.
*** According to EN 1759-1:2004.

We reserve the right to change the design and material of this product without notice.

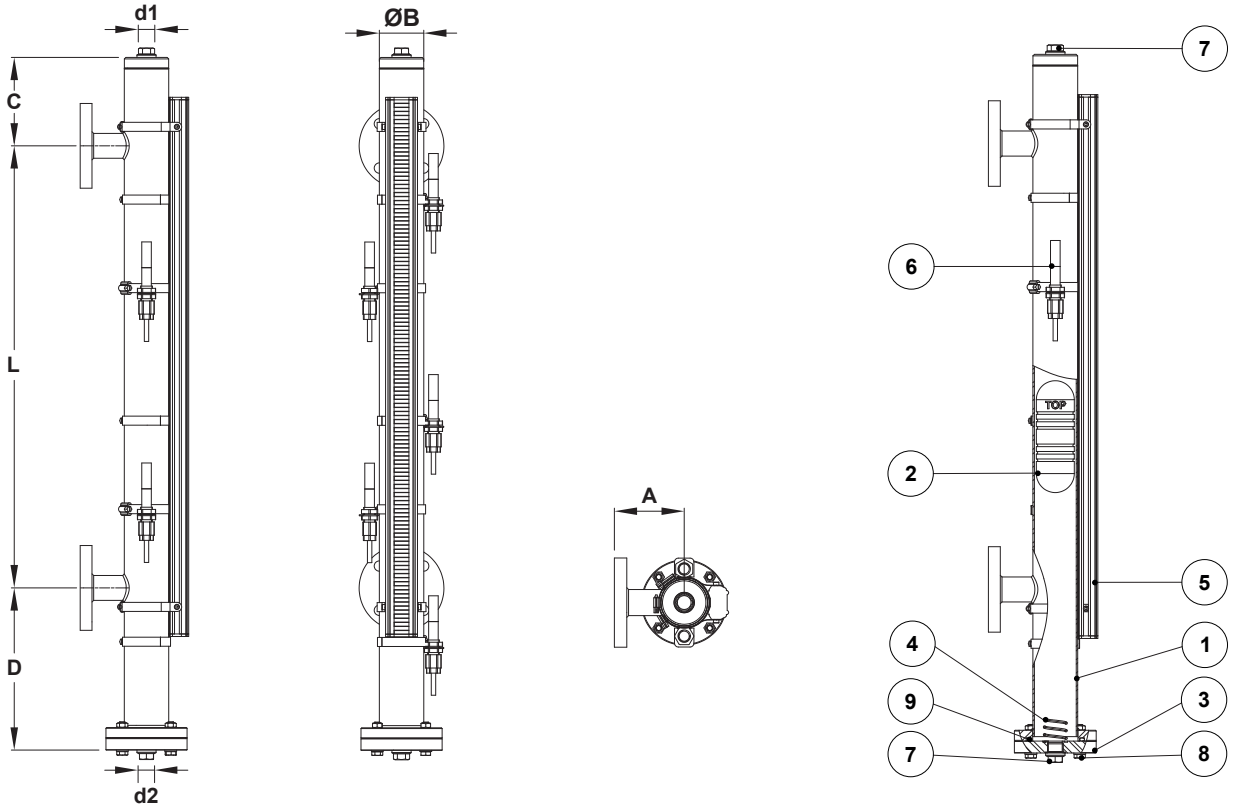

DIMENSIONS (mm)								
SIZE	**A**	**ØB**	**C**	**D**	**d1**	**d2**	**L**	**WEIGHT (kg)**
1/2" – DN 15	90	60	120	220 **	1/2"	1/2"	*	***
3/4" – DN 20	90	60	120	220 **	1/2"	1/2"	*	***
1" – DN 25	90	60	120	220 **	1/2"	1/2"	*	***

* Center-to-center dimension to be provided by the customer.
** May vary depending on the density of the fluid.
*** Weight to be determined according to final dimensions. Consult the manufacturer.
Remarks: As standard, in versions manufactured with EN 1092-1 flanges or ISO 7 Rp threads, connections d1 and d2 are female threaded ISO 7 Rp. In versions with ASME B16.5 flanges or NPT threads, these connections are female threaded NPT.

MATERIALS		
POS. No.	**DESIGNATION**	**MATERIAL**
1	Body	AISI 316L / 1.4404
2	* Float	** AISI 316 / 1.4401; AISI 316Ti / 1.4571
3	Bottom cover	AISI 316L / 1.4404
4	Float spring	AISI 302 / 1.4300
5	Indication rail	Aluminium with AISI 316 flaps
6	Magnet switch	Plastic
7	Plug	AISI 316L / 1.4404
8	Bolt	Stainless steel A2-70
9	* Seal	** PTFE; Graphite / Stainless steel

* Available spare parts. ** Others on request.

We reserve the right to change the design and material of this product without notice.

MAGNETIC SWITCHES

Magnetic level indicators can be fitted with magnetic reed switches for discrete level control and alarm signaling. These switches are actuated by the float's magnetic field and can be positioned at specific setpoints along the gauge. Ideal for high/low level alarms or pump control, reed switches offer a simple, reliable, and maintenance-free solution for point-level detection in demanding process environments.

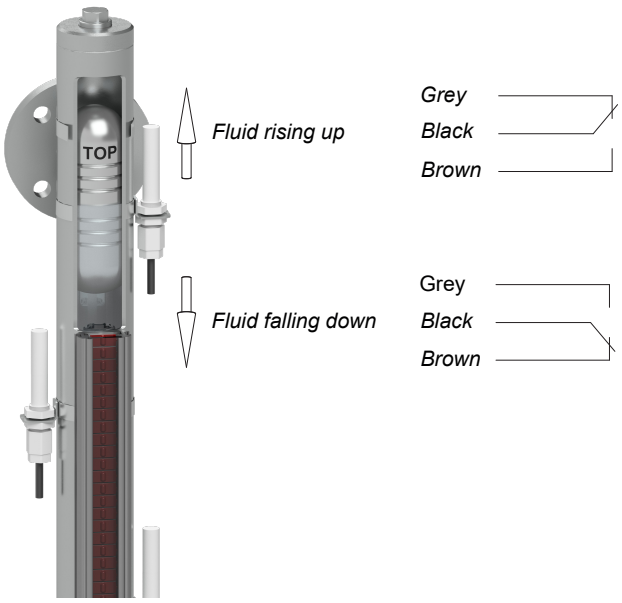

TECHNICAL DATA	
IP rating	IP 67
Contacts	Fe/Ni with rhodium as contact
Cable length	2 meters
Material	ABS
Ambient air temperature	-25 to 70 ºC
Maximum switching frequency	100 Hz
Maximum switching performance	60 VA/W
Maximum switching current	1,0 A
Maximum switching voltage	250 V AC/DC
Switch-on time	4,5 ms
Drop-out time	7,0 ms
Options	IP68 Stainless steel enclosure Ex ia / Ex d Other cable lengths

REED CHAIN TRANSMITTERS

Reed chain transmitters enable continuous level measurement via a standard 4 to 20 mA analog output. The reed chain is mounted along the side of the level gauge (full length as standard), ensuring precise and reliable signal transmission across the entire measurement range. This option provides seamless integration with control systems and enhances process monitoring capabilities.

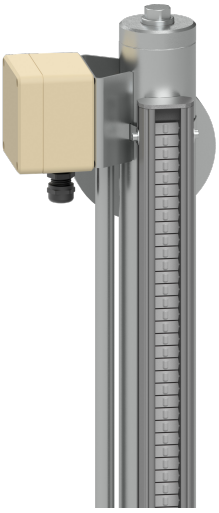

TECHNICAL DATA	
IP rating	IP 67
Supply voltage	8 to 35 V DC
Output	4 to 20 mA (2 wire)
Temperature	-50 to 350 ºC
Accuracy	± 7,5 mm
Material	ABS (enclosure) AISI 316L /1.4404 (rod)
Electrical connections	M20 x 1,5 cable gland
Options	IP68 Higher accuracy (± 5 mm) HART communication Stainless steel enclosure Enclosure with LCD display Ex ia / Ex d

LRQA CERTIFIED ISO 9001

ADCA

ORDERING CODES MLI										
GROUP DESIGNATION	**MLI**	**16**	**LL**	**1000**	**X**	**A**	**T**	**N**	**25**	
MLI – Magnetic level indicator	**MLI**									
SERIES										
MLI16		**16**								
PIPE CONNECTION ORIENTATION										
Side / Side			**LL**							
Side / Bottom			**LB**							
Top / Side			**TL**							
Top / Bottom			**TB**							
CENTER-TO-CENTER										
...										
600 mm				**0600**						
...										
1200 mm				**1200**						
...										
4000 mm				**4000**						
HOUSING / INDICATION RAIL										
Housing in AISI 316L / 1.4404; Indicator rail in aluminium with stainless steel flaps (white/red)					**X**					
FLOAT										
AISI 316 / 1.4401 – Tmax 200 ºC; Pmax 30 bar; fluid densities between 920 and 1075 kg/m³						**A**				
AISI 316Ti / 1.4571 – Tmax 350 ºC; Pmax 40 bar; fluid densities between 920 and 1075 kg/m³						**H**				
Non-standard float (special densities or process conditions) **(a)**						**X**				
SEAL MATERIAL										
PTFE – Tmax 200 ºC							**T**			
Graphite / Stainless steel – Tmax 350 ºC							**G**			
PIPE CONNECTIONS										
Flanged EN 1092-1 PN 40								**N**		
Flanged ASME B16.5 Class 150								**U**		
Flanged ASME B16.5 Class 300								**V**		
Male threaded ISO 7 R								**A**		
Male threaded NPT ASME B1.20.1								**C**		
SIZE										
1/2" or DN 15									**15**	
3/4" or DN 20									**20**	
1" or DN 25									**25**	
SPECIAL CONSTRUCTION / ADDITIONAL OPTIONS										
A full description must to be provided and validated in case of a non-standard construction										**E**

Remarks: Accessories must be requested separately, e.g.: MLI16LL0600XATN25 fitted with 5 pc. MSB2 magnetic reed switches.
(a) Must be specified separately, e.g.: MLI16LL0600XXTN25 with float for liquid density 750 kg/m³ at 6 bar and 150 ºC.