DIRECT STEAM INJECTION HUMIDIFIERS
DSH

DESCRIPTION

The ADCA DSH series of direct steam injection humidifiers are designed to ensure highly efficient and moisture-free steam injection in air ducts and AHU for humidification purposes. These units are completely manufactured from corrosion resistant stainless steel, and are available as plug-and-play packaged solutions or alternatively as individual components to be incorporated into humidification systems. Each humidifier is manufactured as a bespoke solution to meet flow requirements and duct design with single or multiple injection tube design.

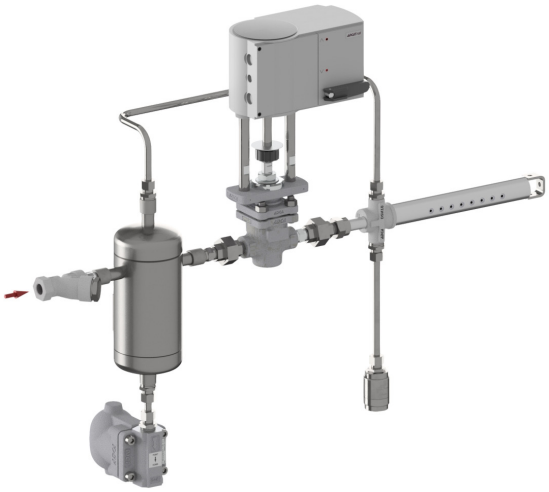

Single tube humidifier

OPERATION

Steam moves in the supply line passing through a strainer to remove solid particles and, if necessary, through a pressure reducing valve to reduce it to humidification pressure (generally around 1 to 2 bar). Steam then passes through an S16TSS centrifugal humidity separator which removes any remaining finer particulate matter and most moisture content. The separator special design dries the steam which is injected and also the steam which feeds the heating chamber keeping heating temperatures stable. As steam leaves the humidity separator and passes through the jacketed injection tubes it is kept at a constant temperature, preventing condensation to be carried over with the steam. Condensate collects on the bottom of the separator and is removed from the system at saturated temperature via an FLT float and thermostatic steam trap. Condensate which forms inside the injection tube heating chamber is removed by means of one or multiple steam traps depending on the case. An ADCATrol globe control valve equipped with a fail-safe electric or pneumatic actuator provides accurate modulation of flow and, thus, precise humidity control.

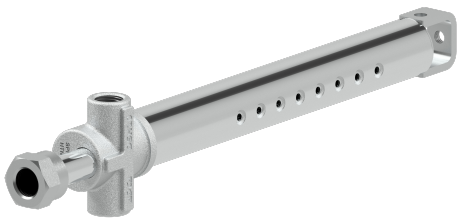

Injection tube

MAIN FEATURES

Quiet and efficient.
Complete stainless steel construction.
Bespoke injection tubes to meet flow requirements and duct design.
Fully jacketed injection tubes providing moisture-free steam injection.
Use of ADCA highly efficient and proven centrifugal separator specially designed for the application.

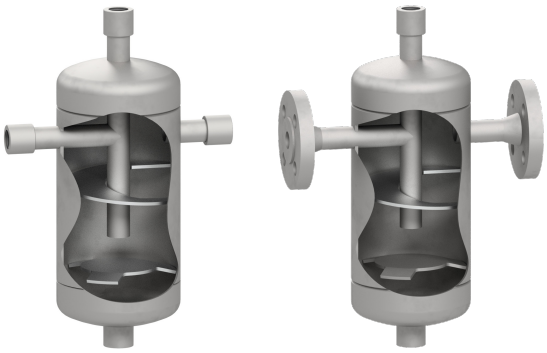

Humidity separator

OPTIONS:	Fully assembled in a plug-and-play package. Sanitary design to ADCAPure standards (see IS DSHS.020 – information sheet).
USE:	Saturated steam.
AVAILABLE MODELS:	DSH10, DSH25 and DSH30.
INJECTION TUBE SIZES:	1/2", 1" and 11/4".
CONNECTIONS:	Female threaded ISO 7 Rp or NPT. Flanged and special connections on request.
INSTALLATION:	Horizontal or vertical (pointing upwards) installation in horizontal air ducts. Horizontal installation in vertical air ducts. See IMI – Installation and maintenance instructions.

We reserve the right to change the design and material of this product without notice.

ABSORPTION DISTANCE

Absorption distance is the dimension from the injection tube outlet to the downstream point where steam has been fully absorbed by the air passing through and is no longer visible as mist. The absorption distance serves as base for the calculation of the minimum distances to any obstacle (e.g. branches, filters, ventilators) installed downstream. If such obstacles would otherwise be located at a shorter distance, unabsorbed steam would hit those parts and condense, causing dripping which often results in microbial growth and, consequently, odors and an overall unhealthy air.

Absorption distance is mainly affected by:
- Air temperature: absorption distance decreases with increase in inlet air temperature.
- Inlet relative humidity: absorption distance decreases with increase in inlet relative humidity.
- Required relative humidity: absorption distance increases with increase in required relative humidity.
- Mixing homogeneity: absorption distance decreases with increase in mixing homogeneity.

SANITARY DESIGN

The presence of chemicals used in water treatment of plant steam boilers which produce steam used in humidification systems can have toxic effects on human health. Regulations have come into force in some countries so that only clean steam is used for humidification purposes and, to meet such requirements, ADCA DSH direct steam humidifiers can be tailor-made for use with clean steam. These can be supplied with individual ADCAPure components or as plug-and-play packaged solutions. See IS DSHS.020 (Technical information) for further details and other surface finish options.

SINGLE VS MULTI-TUBE HUMIDIFIERS

A single-tube humidifier is the most economically viable solution if a single injection tube respects the humidification load and the higher absorption distance (generally associated with single-tube humidifiers) is lower than the distance to any obstacle downstream – Consult Table 1 and Table 2.
If on the other hand, the available distance is insufficient to accommodate the necessary absorption distance of a single-tube solution or when duct height is significant then a multi-tube humidifier should be selected. This solution will shorten the necessary absorption distance by up to 4 times as the increase in injection points will decrease flow velocity and also promote a homogenous and efficient mixing – Consult Table 3 and Table 4.

TABLE 1 – INJECTION TUBE STEAM CAPACITY – SINGLE-TUBE (kg/h)

MODEL	C * (mm)	STEAM PRESSURE TO HUMIDIFIER SUPPLY CONNECTION (bar)															
		0,25	0,5	0,75	1	1,25	1,5	1,75	2	2,25	2,5	2,75	3	3,25	3,5	3,75	4
DSH10	180 – 450	17	24	30	35	38	41	45	49	51	53	56	60	61	63	67	70
	451 – 650	21	31	38	43	46	50	55	61	64	67	71	75	77	79	83	87
	651 – 1000	32	46	55	64	70	76	83	90	94	99	105	111	114	117	123	128
	≥ 1001	43	63	74	86	94	103	112	121	127	133	141	149	153	157	165	173
DSH25	330 – 600	72	103	126	145	159	173	188	204	214	226	237	251	257	266	279	291
	601 – 900	78	114	138	158	172	187	204	221	232	248	261	274	280	288	303	319
	901 – 1250	95	139	168	192	212	232	253	273	286	301	316	332	339	349	368	386
	≥ 1251	114	166	200	230	252	275	299	324	341	359	377	397	–	–	–	–
DSH30	980 – 1250	127	185	223	252	277	304	331	358	378	399	421	444	–	–	–	–
	1251 – 1550	155	226	273	309	340	372	404	438	463	489	515	542	–	–	–	–
	≥ 1551	189	276	334	378	416	455	494	535	565	597	628	662	–	–	–	–

* Tube insertion length (see dimensions table).

TABLE 2 – MAXIMUM RECOMMENDED DUCT HEIGHT FOR SINGLE-TUBE HUMIDIFIER

INJECTION TUBE	DSH10	DSH25	DSH30
DUCT HEIGHT	Up to 900 mm	Up to 1100 mm	Up to 1300 mm

We reserve the right to change the design and material of this product without notice.

HOW TO SIZE

Example 1 – Single-tube humidifier

Installation position: Inside a horizontal air duct with 2000 mm of available downstream distance without obstacles.
Duct size (H x W): 500 x 800 mm
Maximum humidification load: 100 kg/h @ 1 bar

Step 1: Select the injection tube model

A single-tube humidifier is appropriate for the required absorption distance (see Note).

According to Table 1, a single DSH25 injection tube respects the maximum humidification load as it ensures 158 kg/h for an insertion length between 600 and 901 mm.

Step 2: Select the humidity separator

The humidity separator should be of the same size as the pipeline upstream which has previously been sized accordingly, e.g. by pressure drop or velocity, not exceeding 25 m/s (recommended).
For the current example, with a maximum humidification load of 100 kg/h @ 1 bar, the recommended pipe size is 11/4" and so the appropriate humidity separator is an 11/4" S16TSS.

Step 3: Select the control valve and actuator

After calculating the required Kv for the application one can find the valve Kvs on the respective ADCATrol valve datasheet. For the current example, the selection could be e.g. a 1" ADCATrol V16/2I with a 25 mm seat and Kvs of 10 m³/h to suit the application. Alternatively, a similar valve in 11/4" with a 25 mm seat (reduced bore) can be selected. The valve can be fitted with an ADCATrol AVF series electric fail-safe spring return actuator or a reverse action ADCATrol PA series pneumatic actuator.

Step 4: Steam traps, pressure reducing station and ancillaries

A suitable trapping set must be installed on the drain connection of the humidity separator and heating chamber. A pressure reducing station may be required in some situations to reduce system pressure to the desired value and different valves and ancillaries may also be necessary. Consult the manufacturer for further information.

TABLE 3 – INJECTION TUBE STEAM CAPACITY – MULTI-TUBE (kg/h)

MODEL	C * (mm)	STEAM PRESSURE TO HUMIDIFIER SUPPLY CONNECTION (bar)															
		0,25	0,5	0,75	1	1,25	1,5	1,75	2	2,25	2,5	2,75	3	3,25	3,5	3,75	4
DSH10	180 – 1000	43	62	74	86	94	102	112	121	126	133	141	149	153	157	166	172
	≥ 1001	58	85	99	116	126	139	151	163	171	179	190	201	206	211	222	233
DSH25	330 – 1250	128	187	226	259	286	313	341	368	386	406	426	448	457	471	496	521
	≥ 1251	153	224	270	310	340	371	403	437	460	484	508	535	562	589	617	645
DSH30	980 – 1550	209	305	368	417	459	502	545	591	625	660	695	731	767	803	840	877
	≥ 1551	255	372	450	510	561	614	666	722	762	805	847	893	939	985	1032	1079

* Tube insertion length (see dimensions table).

TABLE 4 – MINIMUM RECOMMENDED NUMBER OF INJECTION TUBES FOR MULTI-TUBE HUMIDIFIER

DUCT HEIGHT	Up to 1500 mm	1501 – 2000 mm	2001 – 2500 mm	Above 2501 mm
Nº OF TUBES	2	3	4	5 or more

Example 2 – Multi-tube humidifier

Installation position: Inside an AHU with 500 mm downstream distance to fan entry
AHU size (H x W): 1600 x 1600 mm
Maximum humidification load: 180 kg/h @ 1,5 bar

Step 1: Select the injection tube model and quantity

A multi-tube humidifier is recommended in order to ensure complete steam absorption before reaching the fan entry (see Note).
According to table Table 4 a total of three injection tubes are recommended for an AHU height of 1600 mm. Their nominal size can then be selected according to Table 3. In this case, a set of three DSH25 will ensure 371 kg/h for an insertion length ≥ 1250 mm.

Step 2: Select the humidity separator

The humidity separator should be of the same size as the pipeline upstream which has previously been sized accordingly, e.g. by pressure drop or velocity, not exceeding 25 m/s (recommended).
For the current example, with a maximum humidification load of 180 kg/h @ 1.5 bar, the recommended pipe size is 11/2" and so the appropriate humidity separator is an 11/2" S16TSS.

Step 3: Select the control valve and actuator

After calculating the required Kv for the application one can find the valve Kvs on the respective ADCATrol valve datasheet. For the current example, the selection could be e.g. an 11/2" ADCATrol V16/2I with a Kvs of 16 m³/h to suit the application. The valve can be fitted with an ADCATrol AVF series electric fail-safe spring return actuator or a reverse action ADCATrol PA series pneumatic actuator.

Step 4: Steam traps, pressure reducing station and ancillaries

A suitable trapping set must be installed on the drain connection of the humidity separator and one or multiple steam traps must also be installed to drain the heating chambers and manifold if any. A pressure reducing station may be required in some situations to reduce system pressure to the desired value and different valves and ancillaries may also be necessary. Consult the manufacturer for further information.

Note: For information on ADCA DSH absorption distances consult the manufacturer. Required information: Inlet air temperature (ºC), inlet relative humidity (%), outlet relative humidity (%), injection steam pressure (bar), maximum humidification load (kg/h), duct/AHU dimensions (H x W in mm).

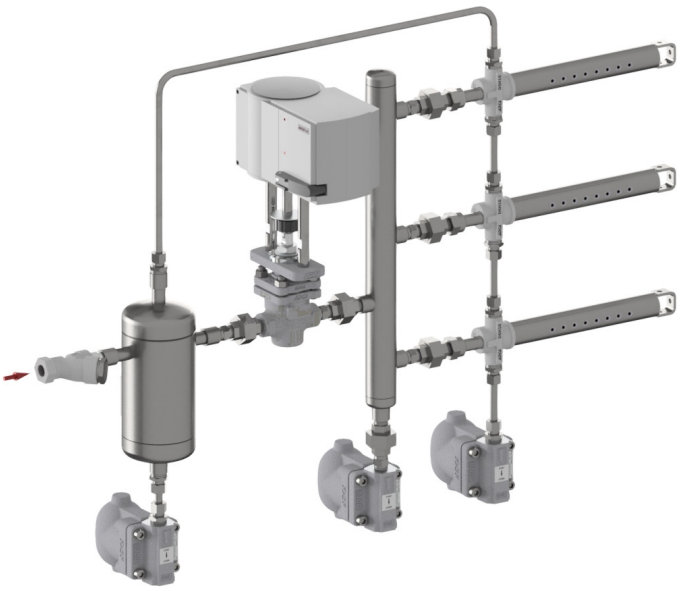

We reserve the right to change the design and material of this product without notice.

INJECTION TUBES

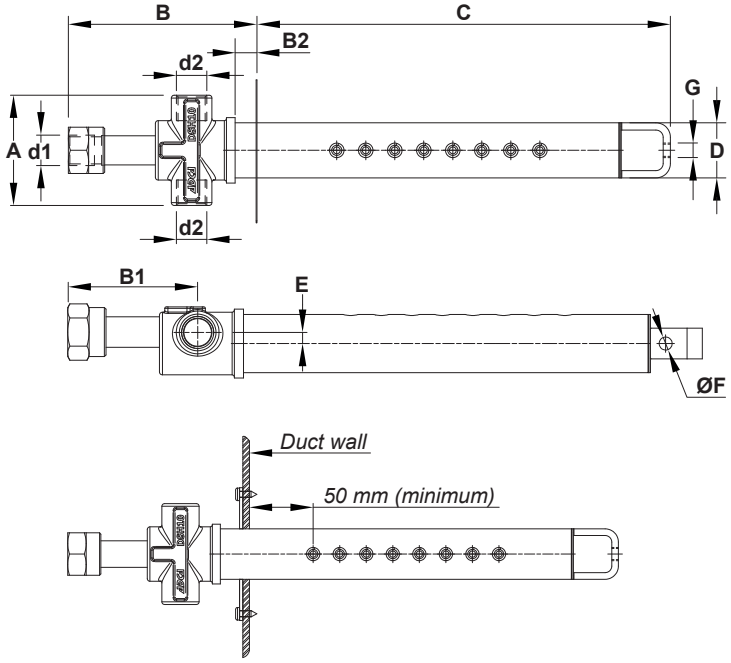

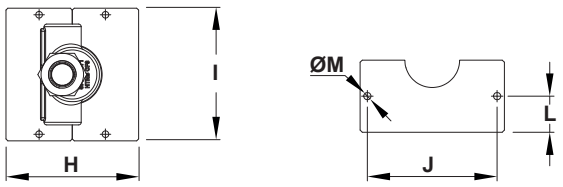

Cover plates

CE MARKING – GROUP 2 (PED – EUROPEAN DIRECTIVE)	
PN 6	**CATEGORY**
1/2" to 11/4"	SEP

LIMITING CONDITIONS	
Body design conditions	PN 6
PMA – Maximum allowable pressure	4 bar
TMA – Maximum allowable temperature	152 ºC

DIMENSIONS (mm)

MODEL	A	B	B1	B2 *	C ** MIN. – MAX.	D	d1	d2	E	ØF	G	H	I	J	L	ØM	WGT. (kg)
DSH10	76	135	85	20	180 – 3100	38	1/2"	1/2"	7,3	8,5	M10	100	100	90	25	5	***
DSH25	88	142	92	15	330 – 3100	51	1"	3/4"	11,4	8,5	M10	110	110	100	27,5	5	***
DSH30	122	177	112	16	980 – 3100	76	11/4"	11/4"	17	8,5	M10	150	130	120	37,5	5	***

* When thermal insulation is present, this dimension must be increased accordingly.
** Tube insertion length to be defined according to customer requirements (e.g. duct width).
*** To be confirmed after the exact length is defined.

STEAM EMISSION DIRECTION

Steam injection should be against the air flow. On vertical air flow applications, the steam should be injected upwards, regardless of the air flow direction.

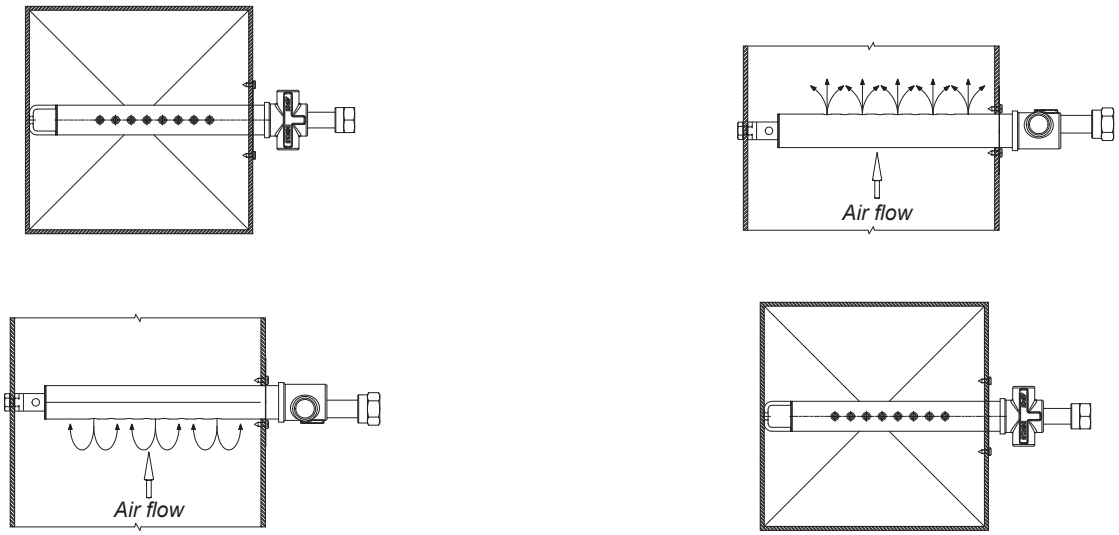

Horizontal duct (plan view)

Vertical duct (plan view)

We reserve the right to change the design and material of this product without notice.

S16TSS HUMIDITY SEPARATOR

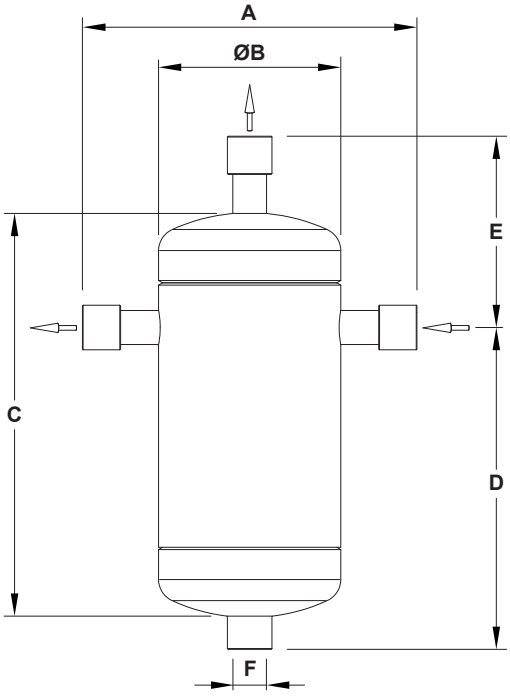

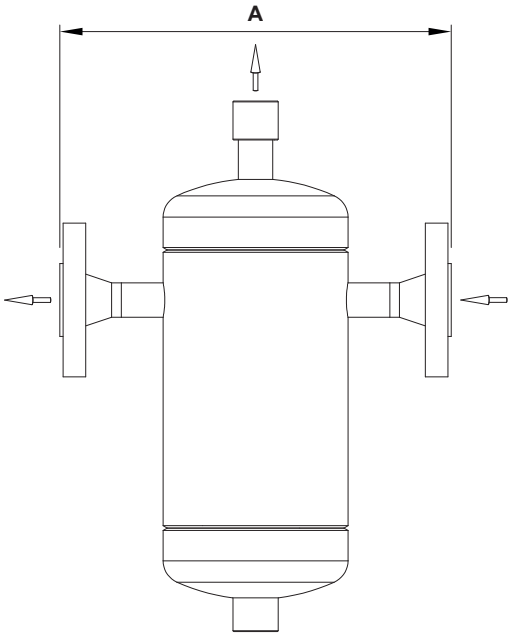

DIMENSIONS (mm) *										
SIZE	THREADED	PN 16	CLASS 150	ØB	C	D	E	F **	VOLUME (L)	WEIGHT (kg)
	A	A	A							
1/2"	210	242	261	114	260	205	123	1/2"	2,2	3,2
3/4"	210	243	267	114	260	205	123	1/2"	2,3	3,6
1"	210	234	265	114	300	220	148	1/2"	2,7	4,2
11/4"	245	266	296	141	395	305	161	1/2"	5,5	7,4
11/2"	260	275	309	141	435	340	176	1/2"	6,1	8,6
2"	300	314	345	168	505	405	186	1/2"	10,9	11,7

* For certified values, consult manufacturer. Weights refer to threaded versions, other versions may have slightly different values.
** As standard, in separators manufactured with ISO 7 Rp threads or PN 16 flanges, the drain connection is also female threaded ISO 7 Rp. In versions with NPT threads or ASME Class 150 flanges, this connection is also female threaded NPT.

BODY LIMITING CONDITIONS *	
ALLOWABLE PRESSURE	RELATED TEMPERATURE
16 bar	50 ºC
15 bar	100 C
12,7 bar	200 ºC
12 bar **	250 ºC

* Rating according to EN 1092-1:2018.
** PMO – Maximum operating pressure for saturated steam.
Minimum operating temperature: -10 ºC.
Design code: AD-Merkblatt.

CE MARKING – GROUP 2 (PED – EUROPEAN DIRECTIVE)	
PN 16	CATEGORY
1/2" to 1"	SEP
11/4" to 2"	1 (CE marked)

We reserve the right to change the design and material of this product without notice.

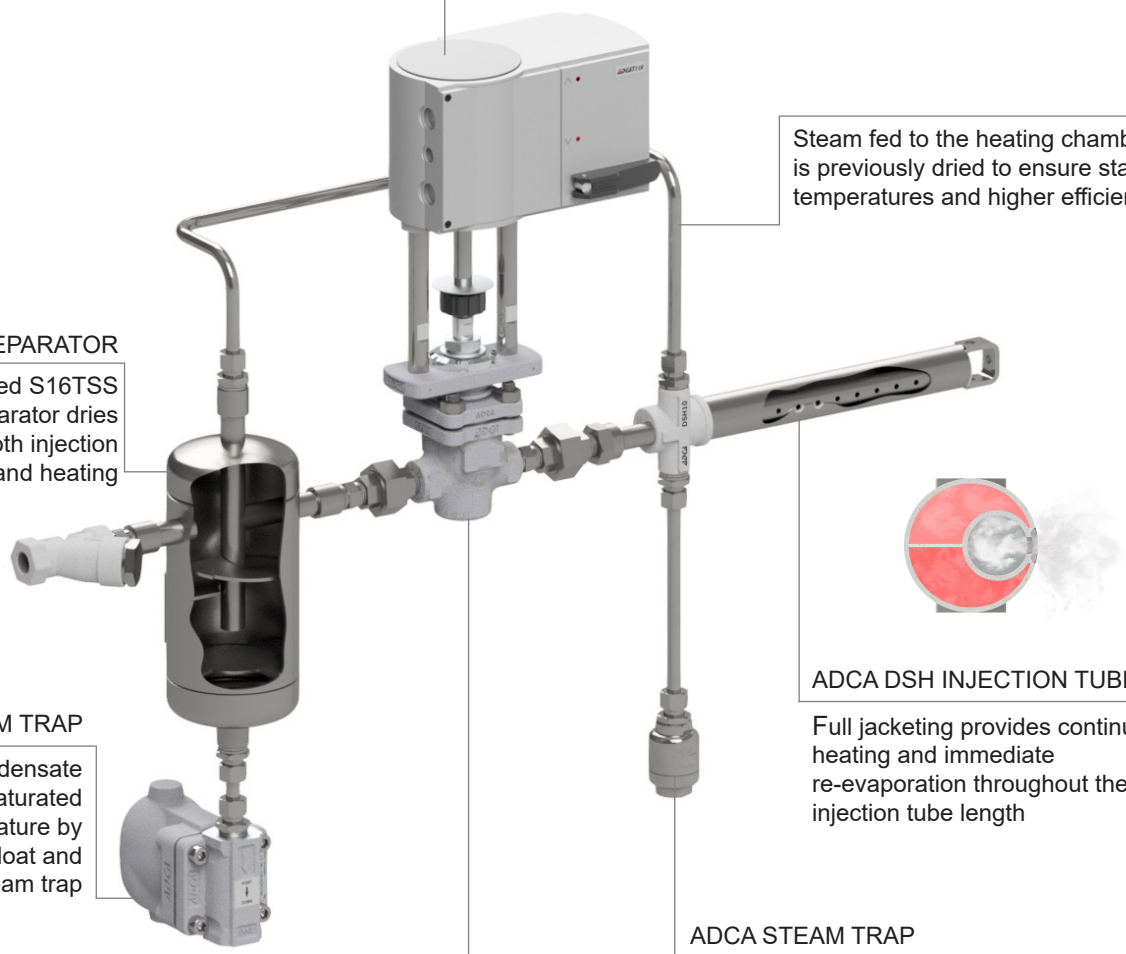

ACTUATOR

Choice of fail-safe spring return electric actuator or ADCATrol pneumatic diaphragm actuator

Steam fed to the heating chamber is previously dried to ensure stable temperatures and higher efficiency

ADCA HUMIDITY SEPARATOR

Specially designed S16TSS centrifugal separator dries steam used for both injection and heating

ADCA DSH INJECTION TUBES

Full jacketing provides continuous heating and immediate re-evaporation throughout the injection tube length

ADCA STEAM TRAP

Immediate condensate discharge at saturated steam temperature by means of an FLT float and thermostatic steam trap

ADCA STEAM TRAP

Various trapping options depending on tube quantity and load

ADCATROL CONTROL VALVE

Threaded or flanged, full bore, reduced bore or microflow control valve

We reserve the right to change the design and material of this product without notice.

CONDENSATE DRAINAGE CONFIGURATIONS FOR MULTI-TUBE HUMIDIFIERS

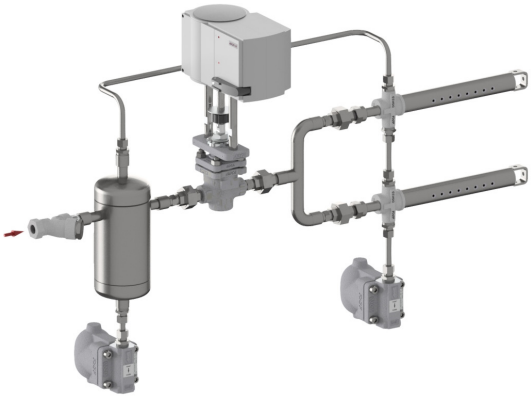

In systems with two injection tubes, two steam traps are sufficient.

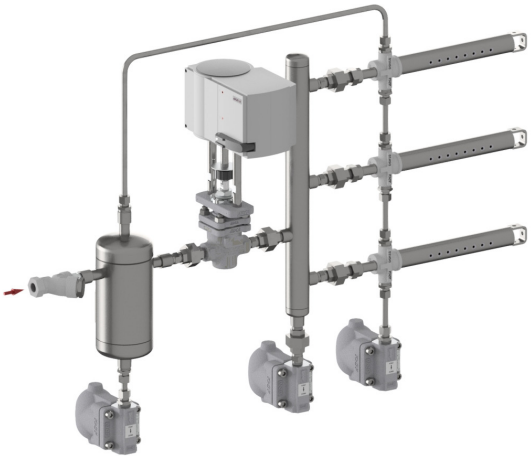

Recommended when the sum of insertion lengths (dimension “C”) totals 7 meters or less.

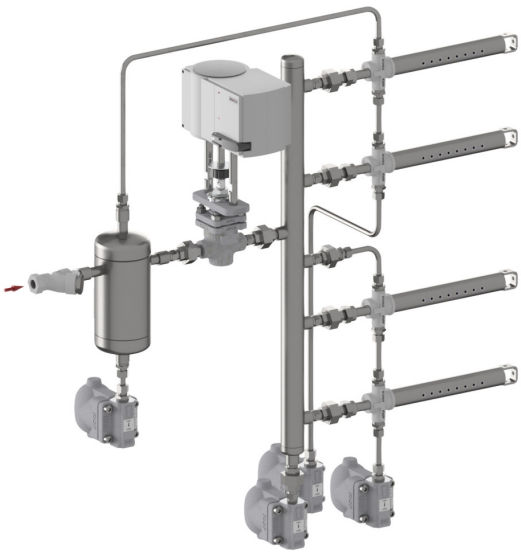

Recommended when the sum of insertion lengths (dimension “C”) totals more than 7 meters.

Remarks: The number of injection tubes may vary. Images above are merely indicative.
The size of the injection tube manifold must always be greater than the nominal size of the upstream humidity separator.

We reserve the right to change the design and material of this product without notice.

ORDERING CODES DSH								
MODEL	**DSH**	**10**	**XXXX**	**X**	**A**	**A**	**15**	
DSH – Injection tube	**DSH**							
TYPE								
10		**10**						
25		**25**						
30		**30**						
INSERTION LENGTH (mm)								
Specify dimension “C”			**XXXX**					
OPTIONS								
None				**X**				
“B2” increased by 30 mm to accommodate thermal insulation thickness				**I3**				
PIPE CONNECTIONS (d1)								
Female threaded ISO 7 Rp					**A**			
Female threaded NPT ASME B1.20.1					**C**			
Flanged EN 1092-1 PN 16					**L**			
Flanged ASME B16.5 Class 150					**U**			
PIPE CONNECTIONS (d2)								
Female threaded ISO 7 Rp						**A**		
Female threaded NPT ASME B1.20.1						**C**		
SIZE (d1 x d2)								
1/2" or DN 15 x 1/2"							**15**	
1" or DN 25 x 3/4"							**25**	
11/4" or DN 32 x 11/4"							**32**	
SPECIAL CONSTRUCTION / ADDITIONAL OPTIONS								
A full description must to be provided and validated in case of a non-standard construction								**E**